RTS
1407
P38

H. D. Quinby

STATE OF CALIFORNIA
DEPARTMENT OF PUBLIC WORKS
DIVISION OF BAY TOLL CROSSINGS

SAN FRANCISCO – MARIN CROSSING
UNDERWATER TUBE ALTERNATIVES

FINAL ENGINEERING REPORT

April, 1967

LIBRARY
UNIVERSITY OF CALIFORNIA
INSTITUTE OF TRANSPORTATION

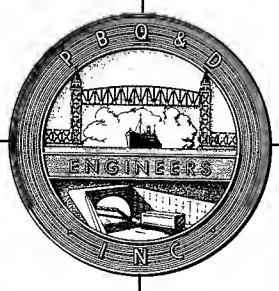

PBQ&D, INC.
ENGINEERS

SAN FRANCISCO

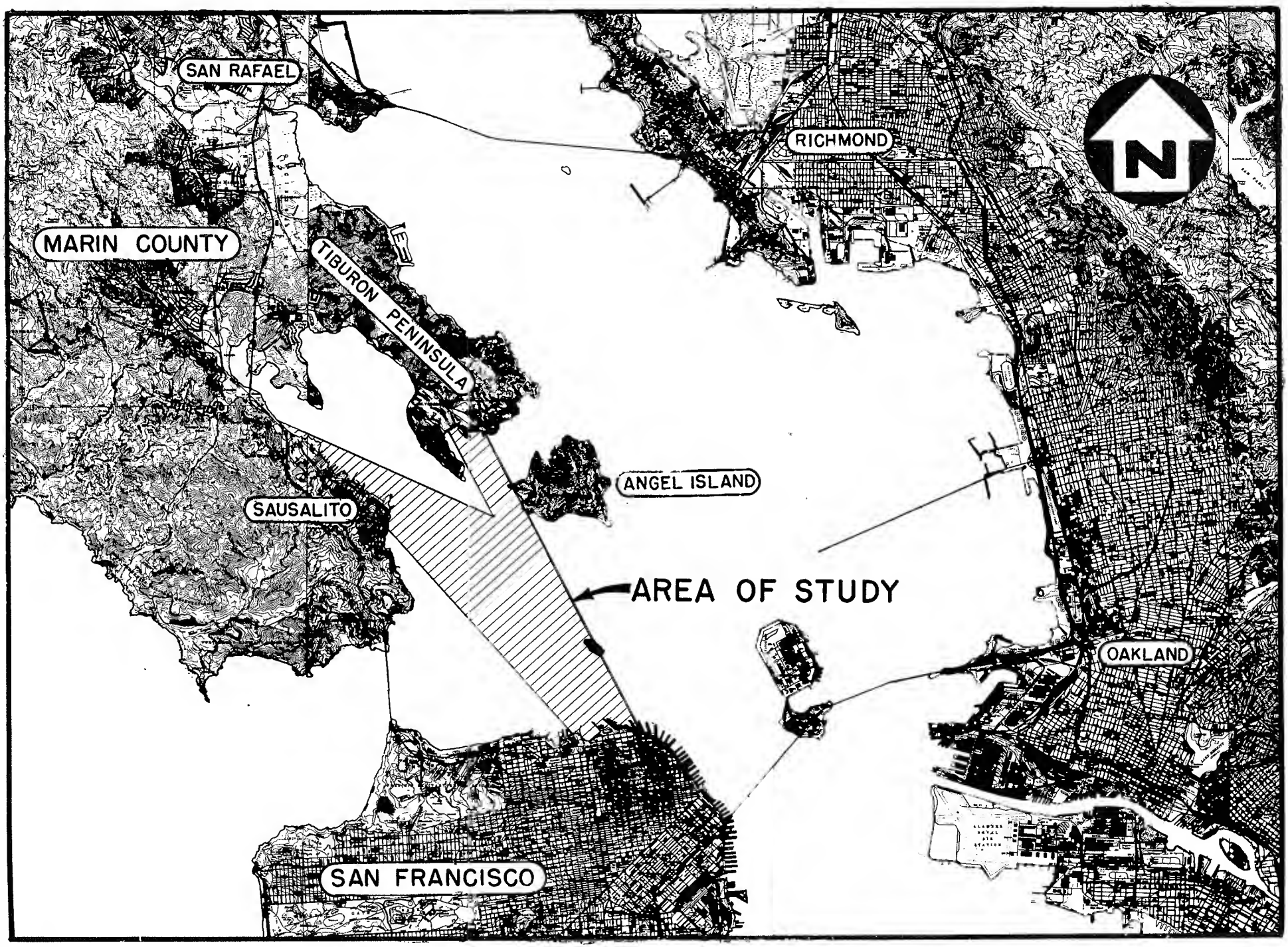
SAN RAFAEL
RICHMOND
N
MARIN COUNTY
TIBURON PENINSULA
ANGEL ISLAND
SAUSALITO
AREA OF STUDY
OAKLAND
SAN FRANCISCO

Tubes S.F. Bay

#5916416

STATE OF CALIFORNIA
DEPARTMENT OF PUBLIC WORKS
DIVISION OF BAY TOLL CROSSINGS

SAN FRANCISCO – MARIN CROSSING
UNDERWATER TUBE ALTERNATIVES

FINAL ENGINEERING REPORT

April, 1967

PBQ&D, INC.
ENGINEERS

JOHN E. EVERSON
VICE PRESIDENT

WINFIELD O. SALTER
VICE PRESIDENT

25 MAIDEN LANE, SAN FRANCISCO, CALIF. 94108
986-2929 TELEX: 03-4763 CABLE PARKLAPSF

Affiliated with Parsons, Brinckerhoff, Quade & Douglas

May 26, 1967

Mr. E. R. Foley
Chief Engineer
Division of Bay Toll Crossings
151 Fremont Street
San Francisco, California 94105

Subject: San Francisco - Marin Crossing
Underwater Tube Alternatives
Final Engineering Report

Dear Mr. Foley:

We are pleased to submit to you our Final Engineering Report, Underwater Tube Alternatives, San Francisco - Marin Crossing. This report has been prepared under Phase III of our Agreement with the Division of Bay Toll Crossings dated 19 July and approved 17 August 1966. It has been prepared under the supervision of our Project Manager for the design of the BART Transbay Tunnel, George J. Murphy, assisted by the staff of Parsons, Brinckerhoff, Quade & Douglas in New York, and its Associated Consultant, John O. Bickel.

We wish to acknowledge the excellent cooperation given us by your staff and to express our pleasure of working together with your engineers.

Very truly yours,

PBQ&D, Inc.

John E. Everson

John E. Everson

JEE/jel

CONTENTS

1.	Introduction	Page 1
2.	Alignment Studies	1
	a) Geology and Soils Information	1
	b) Tube Alignments	2
3.	Tunnel Configurations	5
	a) Basic Considerations	5
	b) Tube Sections	7
	c) Recommended Transit Section	13
	d) Recommended Vehicular Section	13
4.	Structural Design of Tube	13
	a) Design Criteria - Specifications and Controls	13
	b) Structural Design of Vehicular Tube	18
	c) Ventilation Systems Design	20
	d) Ventilation Buildings - Location, Construction and Protection	22
5.	Quantity Estimates	24
6.	Cost Estimates	25
7.	Conclusions	28
	a) Location	28
	b) Tube Sections	29
	c) Design	30
	d) Cost	30
	e) Soils	31
	f) Feasibility	31

ILLUSTRATIONS

(following text)

Fig.	1	Tube Study Alignments
Fig.	2	Plan and Profile - Line T-3
Fig.	3	Plan and Profile - Line T-5
Fig.	4	Tube Sections - Sheet I
Fig.	5	Tube Sections - Sheet II
Fig.	6	Tube Sections - Sheet III
Fig.	7	Typical Ventilation Structure - Vehicular
Fig.	8	Typical Ventilation Structure and Protective Barrier

1. Introduction

The legislature of the State of California has directed the California Department of Public Works, through its Division of Bay Toll Crossings, to make preliminary studies of a new fixed crossing for highway and rapid transit between San Francisco and Marin County. In order to assist them in the specialized field of subaqueous tunnels of the trench type, the Division of Bay Toll Crossings engaged the engineering firm of PBQ&D, Inc. of San Francisco, associated with Parsons, Brinckerhoff, Quade & Douglas, Inc. of New York as Consultants. Under an Agreement dated 19 July 1966 and approved 17 August 1966 PBQ&D, Inc. undertook the following assignments.

Phase I - Initial Meetings - Establishment of Guide Lines

Phase II - Periodic Meetings during Study - Review of Studies & Preliminary Findings

Phase III - Review and Analysis of Feasibility Study - Preparation of Final Report

This report summarizes the results of our work, including the review and analysis of all study data presented in summary form by the Division, of which we have made use during the preparation of this report.

2. Alignment Studies

a) Geology and Soils Information

Due to the preliminary nature of these studies, geological exploration was limited to a geophysical survey of the several crossing lines to determine the location and depth of underlying bedrock. This determination is of particular importance in trench-type tunnels where avoidance of high bedrock profiles is essential if economy of construction is to be attained.

The general geology of San Francisco Bay, as well as existing water depths, has been carefully determined and is fully recorded in the various publications and charts of the several U. S. Government agencies charged with this responsibility. In general, the alluvium cover overlying the bedrock is composed of sands, silts and clays with mixed stratifications.

After reviewing the geophysical data available for the crossing corridors we are of the opinion that the soils that will be encountered on the several crossing lines will be predominately granular (sandy). These soils are particularly suitable for the construction of trench-type tunnels and may be excavated using conventional dredging equipment and techniques. Further, this material can be used for ordinary backfills and mud not necessarily wasted - as might apply to softer muds, clays and silts.

It is felt, therefore, that the geophysical data obtained in combination with published data are sufficient to arrive at valid comparisons, regarding the construction feasibility of various type tunnels along the several routes studied. It is, of course, axiomatic that prior to undertaking final design, additional programs of sub-surface explorations would be undertaken to define more clearly the soil and underlying bedrock profiles.

b) Tube Alignments

A total of five principal alignments have been studied for vehicular tunnels, rapid transit tunnels or a combination of both. The principal tube alignments are identified by specific letter designation given hereinafter and are shown in Fig. 1 of this report.

Lines T-1 and T-1A: These alignments commence at the Embarcadero at the foot of Telegraph Hill, continue northwesterly across the Bay, passing to the east of Alcatraz, thence between Alcatraz and Angel Island, continuing to a termination on the Marin shore northerly of Sausalito. These alignments, after study, could not receive favorable consideration because: (1) they result in the longest crossing; (2) the necessity of excavating bedrock in the vicinity of Alcatraz Island; (3) the excessively deep profile required to cross deep sink hole just off Alcatraz Island, as well as the deep profiling required at the west end of Raccoon Strait; and (4) the disruption of those local traffic arteries, pier and waterfront structures at the San Francisco terminus required to connect effectively with the existing Embarcadero Freeway.

Although alternative alignment T-1A was investigated with a view towards shortening T-1, it has, nonetheless, the above noted disadvantages associated with the latter.

Line T-2: This alignment commences at Aquatic Park in San Francisco, passes to the west of Alcatraz Island, thence continues via the western tip of Angel Island, thence continuing into Marin County via the deep Raccoon Strait and the Tiburon peninsula.

This line was especially chosen and developed because it represents the shortest crossing of the Bay between the two counties. This alignment after study, however, could not receive favorable consideration because: (1) the terrain features of the western slopes of Angel Island, as well as those connected with the northern approach through the Tiburon peninsula, are not favorable for an economical design of vehicular or transit structures; (2) a submerged crossing of Raccoon Strait, where water depths and currents are excessive would needlessly complicate profiles for tunnel structures, as well as the approach structures on the Tiburon peninsula; and (3) it would create considerable disruption to all community activities on this peninsula and an effective solution of this latter problem would be needlessly expensive.

Line T-3: This alignment commences in San Francisco at the extension of Columbus Avenue into Aquatic Park, thence crosses the Bay in a northwesterly direction, directly into Marin County with a shore terminus at the southern extremity of Sausalito adjacent to the marina basins.

We had earlier studied this alignment and had recommended it as a feasible crossing line in a presentation to the Transportation and Planning Committee of the San Francisco Board of Supervisors. At the time of our recommendation we did not have the benefit of the bottom profiling to determine bedrock and alluvium stratifications that was undertaken during 1966 by a geophysical exploration firm engaged by the Division of Bay Toll Crossings. These latter surveys were furnished us during our present studies and they generally confirmed that the profile of bedrock lay generally beneath the proposed profile of the tunnel crossing. Expensive underwater rock excavation, therefore, need not be considered. Additionally, the profile of the existing Bay bottom along this alignment shows depths of water compatible with the general requirements for the adoption of trench-type tunnels.

Line T-3, shown in plan and profile in Fig. 2, is particularly well adapted for a rapid transit crossing of the Bay, representing as it does the shortest shore-to-shore crossing, as well as lending itself to adequate and feasible approach subway connections in both counties. It is for these reasons we continue to recommend this as the optimum alignment for the construction of a trench-type rapid transit tube.

We do not, however, consider this alignment, particularly as it relates to the approach connections in Marin County, acceptable for the construction of a trench-type vehicular tunnel crossing. Because of the substantial cross-section requirements of the latter, it would result

in massive disruption of the Sausalito downtown area, as well as its important waterfront facilities. We will discuss below an alignment for a vehicular facility.

Line T-4B: This alignment commences in San Francisco at the same location described under Line T-3 above. However, after leaving the starting point, it continues on an alignment across the Bay that places it midway between Lines T-3 and T-1. It would be well to point out that we had studied a companion Line T-4, whose essential difference was the reversing of the relative locations of the transit and vehicular tubes along with certain modifications in the approach connections to each type. Therefore, because the problem of the approaches at the terminal connections is more readily resolved utilizing the T-4B alignment, our comments will be confined to this latter.

One of the advantages gained using this alignment was that it touched upon the Marin shore well to the north of the downtown area of Sausalito. This assured no massive disruption in the street and highway network, as well as the waterfront properties of the city.

It has unfortunately several disadvantages: (1) the desire to terminate the crossing north of Sausalito considerably increases the total length of crossing, thereby increasing its cost; and (2) in an effort to reduce the latter, consideration was given to the introduction of a structure in the form of trestle or of a sand-filled causeway in the area of Richardson Bay directly offshore of Sausalito. Such structures were deemed unacceptable on the grounds of aesthetics and the man-made barriers they would present to the sizable yachting and small water craft interests.

Other than the above, this alignment is considered satisfactory from point of view of depths of water and the probable absence of areas of high bedrock profiles.

Line T-5: This alignment commences at the San Francisco shore at the same location as Line T-3, described above and proceeds generally parallel to but slightly to the east of this latter line. As it approaches Richardson Bay, however, it remains offshore of Sausalito and reaches the same shore termination north of Sausalito as do Lines T-1 and T-4B heretofore described. A plan and profile for this alignment is shown in Fig. 3.

Line T-5 embodies all the favorable features of Line T-3; i.e., acceptable water depths and absence of high bedrock profiles. It has the added advantage of not entering downtown Sausalito; hence, is fully

acceptable for vehicular or rapid transit tunnels or a combination of these two. We, therefore, fully endorse this alignment for a tunnel crossing.

3. Tunnel Configurations

a) Basic Considerations

During the progress of our investigation of vehicular and rapid transit trench-type tunnels across the Bay between San Francisco and Marin Counties, a large number of tunnel cross-sections were studied in an effort to arrive at the most feasible and economical structure or combination of structures that could be built shore-to-shore. Certain sections were proposed by the Division of Bay Toll Crossings, certain by us based on prior experience gained during the design and construction supervision of these particular sections, and certain other types were proposed by individuals or firms in the Bay Area who were sincere in attempting to find new and presumed less costly solutions for shore-to-shore tunnel connections.

For a rapid transit crossing of the Bay it had been specified that the basis of design would be a tube containing two trackways to carry rapid transit trains in opposing directions. These two trackways would be separated by a central duct, the upper portion of which would provide for emergency ventilation of the trackways and the lower portion would serve as a utility gallery.

For vehicular crossing of the Bay it had been originally specified that the basis of design would be tunnel sections large enough to provide up to ten lanes of traffic. This would have allowed a cost comparison with bridge crossing concepts of the same lane capacity. Also, tunnel crossing concepts by others advanced cross-sections providing this capacity. Preliminary evaluation of single or multiple tube concepts of this lane capacity quickly revealed that the in-place cost of such structures far exceeded those of the equivalent bridge. Since the bridge capacity was predicated first - on a design year beyond 2000 A.D. and second - included a connection to the East Bay, the decision was made to reduce the traffic requirements for tunnel crossings using a shorter traffic design period and eliminating the East Bay connection. Hence, the basis of design became a tunnel of six-lane capacity with two of the lanes reversible to handle peak-hour traffic in the peak direction. Consequently, based on this latter decision, it followed that three 2-lane cells were preferable to two 3-lane cells since the latter would be inefficient in the handling of traffic and would introduce very severe structural design problems.

A primary consideration in the development of the design cross section for a submerged tube is that it shall have an adequate factor of safety against flotation. It has been our practice in tunnels that we have designed to require any submerged tube element when lowered into the tunnel trench to exert a downward force in excess of buoyancy. The backfill cover over the element, as well as the frictional or shear resistance of the surrounding backfill soils, are not taken into account in this initial, but nonetheless critical stage. For the proposed rapid transit tube we set forth below those factors of safety that should be observed and which are criteria used for the Transbay Tube currently under construction.

Stages of Completion	Factor of Safety
1. Fully ballasted at time of sinking	1.06
2. When joined, bulkheaded joint unwatered	1.02
3. All interior concrete and equipment in place - without backfill cover	1.13
4. Completed structure with backfill cover in place	1.43

In summary we would recommend that after determination of the final tube configuration, factors of safety for Stages 1 and 2 be observed; for factors of safety for Stages 3 and 4 we would recommend as a minimum 1.10 and 1.25 respectively.

Finally, remaining criteria that must receive proper consideration in both design and construction of the tube elements individually and the tunnel as a whole are:

1. The section must be watertight under all circumstances.

2. The section must withstand all imposed loads - both static and dynamic, including those loads imposed due to seismic forces. The seismic forces are those corresponding to the design earthquake - which, for the Bay Area, must at least be equal to an earthquake of the magnitude of that which occurred in 1906.

3. For a vehicular tunnel provision must be made for adequate duct capacity for a transverse system of ventilation - which introduces fresh air at regular intervals into the travelled

lanes and exhausts the vitiated air at regular intervals along the entire length of the tunnel. The less demanding requirements for the ventilating of a rapid transit tunnel have been commented upon hereinbefore.

4. The conceptual designs for rapid transit and vehicular tunnels must insure that the individual elements are susceptible to mass production techniques within the capabilities and limitations of shipyards, outfitting basins, etc. available or readily constructed in the greater Bay Area. This becomes an important consideration if tunnel crossings are to be compared or equated to equivalent bridge crossings.

b) Tube Sections

Various tube sections previously referred to that have received serious review and study during the progress of this report are included in the illustrations - particularly Figs. 4-6 inclusive. We feel it important to set forth below our critical comments in regard to those sections - those that possess outstanding advantages and therefore must receive approval as sections most likely to be adopted from point of view of construction feasibility and economy - and those that exhibit manifest disadvantages which in turn rule out their approval.

Tube Sections - Sheet I

Referring to Fig. 4, a total of four sections are shown thereon - one for rapid transit, one for vehicular, and two sections that provide for a combination of rapid transit and vehicular.

Transit Section

The section bearing this title duplicates exactly that section that the Bay Area Rapid Transit District has currently under construction. It is not considered necessary, therefore, to discuss its merit as both a feasible and economical tube for transit operations. It has all the essential elements to insure conformance with established criteria.

Supported Section No. 1

This section of lenticular or severely flattened elliptical shape, proposes to furnish nine lanes of appropriate width for vehicular traffic and two trackways for rapid transit. The section provides the necessary horizontal and vertical clearance required of highway and rapid transit systems to meet latest criteria. We have described this particular

configuration as a supported section; i.e., its proponents postulate that such a section can be supported off the existing bay bottom either on pile structures or caissons set into the Bay floor. This concept eliminates in theory the requirement of a dredged trench , as well as the backfill or protective cover over and around the tube. The data accompanying this section clearly shows the tube to be buoyant in its final position. The support system, therefore, must in itself be sufficiently anchored into the underlying soils or bedrock to insure that it can securely furnish the downward reactions necessary to keep the section from floating. We would point out that structural tension members in the form of caissons, piles, pile supported piers etc. required to secure this type of supported section represent currently a design and construction concept considered unprecedented. The problems involved in construction and testing of these tension members, because of the great number required, would be both difficult and costly.

Because of the supported section's great size, the construction problems involved in the fabrication, launching, towing and sinking of the individual sections would be of a magnitude heretofore not encountered in this type of tunnel construction.

Although the supported section No. 1 is capable of being analyzed structurally, the configuration as shown presents inherent structural inadequacies, requiring engineering investigation and evaluation. Beyond this there are several serious drawbacks that make the feasibility of adopting such a cross-section highly improbable - they are:

1. The height of the tube together with the minimum height of supporting structure above the Bay bottom when subtracted from existing water depths in the navigable channels in the area of the several alignments cannot provide the minimum clear channel depths required by the navigation interests and the Federal agencies responsible to provide and maintain these clearances. It should be pointed out that proposed navigation demands will require a minimum vertical clearance to any obstruction of 75 feet below the specified datum. Along the several favorable alignments there are relatively few lengths where the existing water depths exceed this requirement.

2. The cost of the supporting or tie-down structures could greatly exceed the savings attributable to eliminating the dredged trench and the backfill cover.

3. It is anticipated that it will not only be the navigation interests who will voice their objections to the concept of an exposed tube supported off the Bay bottom, but also the state and municipal

governments because of the ever-present grave hazard to public safety; i.e., the daily use of these exposed, unprotected tubes by residents in pursuit of their daily occupations.

4. Although a matter of technical design and something that could be corrected by a reshaping of the cross-section, the cross-sectional area of the ventilation ducts is considered not fully adequate. Adequate air duct cross-sectional area must be provided in any tunnel in order that the ventilation criteria outlined hereinafter is met which would insure the dilution and removal of toxic and other objectionable gases that arise as by-products of combustion of gasoline and diesel engine operations. However, the reshaping of the tunnel cross-section to insure adequate duct area could act to aggravate certain of the drawbacks previously mentioned for Supported Section No. 1.

Supported Section No. 2

This section differs in concept from the supported section above described in that it is a two-level rather than a single-level structure. Essentially it is a three-way prestressed box, somewhat quasi-oblate in form. It incorporates ten lanes of vehicular traffic, five at each level and two rapid transit trackways. Its advantage similar to Section No. 1 is that is purports to furnish adequate lane capacity for vehicular traffic as well as combining the two rapid transit trackways in a single cross-section.

However, the disadvantages and deficiencies inherent in this section are uniquely similar to those found in Section 1. We must point out from point of fabricating, launching and sinking, the tremendous construction problems of mass producing and handling Section No. 1 - because of its great width are not reduced by the great height of Section No. 2. For certainly there are no navigable channels in the Bay along a recommended alignment that furnish sufficient depth of water to allow the driving of supporting (tie-down) structures for a 56 foot depth of tube while at the same time providing a minimum depth of channel of 75 feet below datum as required by the navigation authorities.

Briefly, the section is deficient in weight, resulting in a net uplift force, consequently requiring the employment of tension piles or caissons in the Bay bottom. Likewise inadequate air duct area has been provided, making proper ventilation of the tube impractical.

Multi-Tube Section

This type of section consists of a series of individual tubes of circular configuration, each containing two lanes for vehicular traffic. The minimum clear distance between adjacent tube shells is sufficient

to allow the end dam plates and bulkhead sections to be laid without interference.

The individual circular tubes as detailed are buoyant; this condition of course can be overcome by increasing the thickness of the structural ring of concrete, in order that the established criteria that tubes have adequate factors of safety against buoyancy be satisfied. To make this section economically competitive with alternative design to be described later, the exterior all-welded steel shell has been replaced by membrane type waterproofing. From point of view of watertightness in tubes subject to static forces this substitution is acceptable. However, because of criteria requirements that an exterior steel shell be included to withstand the effects of seismic forces while maintaining watertight integrity, even though the reinforced concrete lining would develop cracks, this section does not lend itself to further consideration.

Tubes of circular configuration - the best geometric shape to resist hydrostatic and soil loads - lend themselves to mass production in basins, graving docks or shipways and equally are efficiently set into position and connected in the dredged trench. However, incorporating a welded steel shell and increasing the concrete thickness of the shell would make the multi-tube section non-competitive with other sections to be described later.

Tube Sections - Sheet II

Three sections are shown on this sheet (Fig. 5): Single Level Box, Double Level Box and Large Circular. Evaluation of these three tube configurations is reported on below.

Single Level Box

This section was developed early in the study and shows three 3-lane cells rather than the two 3-lane cells that were adopted later. It is not considered desirable or economical to include provision for rapid transit trackways in this configuration; rather, it is carried in the transit section previously described under Fig. 4.

The single level box is particularly attractive economically to fabricate and place. Many tunnels of this type have been constructed in this hemisphere and in Europe, all of which, though considerably shorter in length, are operating quite effectively.

Although the section illustrated is deficient in air duct area for adequate ventilation, this may be overcome by increasing the size of the

two cells to provide this additional area. The low height of this rectangular section is a desirable feature in order to reduce the dredged depth of the trench in which the section is laid.

Utilizing this rectangular shape, an attractive alternative is possible. This is the dividing of the single level box into two separate boxes and at the same time incorporating a single rapid transit trackway in each of these separate boxes. In like manner, ventilation ducts can be installed at the sides of the tube rather than above the roadway, thus insuring a shallower height of section, although there is an overall increase in the width of the sections. However, no difficulty is foreseen in the fabrication and laying of these sections.

Double Level Box

This section has certain similarities in common with Supported Section No. 2 previously described but not favorably considered. The basic geometry and structural framing of this section, providing as it does, ten lanes for vehicular traffic and two rapid transit trackways is superior to the supported section. Comparison of the overall heights shows a considerable reduction in this double level box permitting the placing of this section within a dredged trench without incurring excessive dredging quantities and costs.

This section was developed purely as a conceptual study. It will be noted that the section as shown is buoyant, and further, air ducts for ventilation have not been included. Because other sections developed during this same period held more promise, this section was dropped from further consideration during this study. It is quite possible that a completely revised layout would warrant some further study at a later date if tunnel crossing proved economically justifiable.

Large Circular

This conceptual cross-section was developed during the study with little expectation that it would prove feasible for this crossing. The following comments incorporate the main objections to its use:

1. This multi-level tube section is inefficient in utilization of the circular cross-section and is particularly deficient in required air duct areas for tunnel ventilation.

2. The section is buoyant, hence unacceptable under the design criteria. Actually there are no channels in the Bay Area deep enough to float these sections, unless pontoons were to be used.

3. Its great height makes it impractical to dredge a trench of such great depth. Further, it would be particularly difficult to adapt the section to mass production techniques in an outfitting basin. We cannot recommend this section for any further consideration.

Tube Sections - Sheet III

A series of very interesting configurations is illustrated in Fig. 6. These consist of:

A single level box (Section E-11) with adequate provision made for ventilation of the three cells containing two traffic lanes. The transit section is separate from this single level box. The section as shown is not buoyant and has an exterior steel shell membrane.

A single level box (Section E-7A) and separate transit tube. This configuration is similar to Section E-11 except the box has been deepened to provide a supported roadway with adequate air duct areas beneath. This reduces the section width to something more acceptable and results in a dredged trench of considerably lesser width in which to place this section and the separate transit section. Like Section E-11 this section is not buoyant and has an exterior watertight steel membrane and furnishes adequate duct area for ventilation.

Section E-9 consists of two separated single level box sections of equal heights but somewhat different width. This is because the smaller box has incorporated rapid transit in two trackways, one directly above the other. These boxes are non-buoyant, have an exterior watertight steel membrane and furnish adequate air duct area.

Section D-2C of a basic circular configuration may be compared directly with Section E-9. Rapid transit in this section has been incorporated in two paralleling trackways which are more easily transitioned into the approaches. Each of these separate sections is non-buoyant, has an exterior watertight steel membrane and adequate air duct area.

Section D-3E: This is a single level section consisting of three 2-lane tunnels of circular configuration rigidly joined together in a single structure. Rapid transit is carried in the separate transit tube previously described. Section D-3E, after study and development, was considered the optimum section for vehicular traffic. Therefore, this section will be described in greater detail later in this report.

c) Recommended Transit Section

The section selected for quantity take-off and pricing of a subaqueous rapid transit tube is that entitled "Transit Section" and is shown in Fig. 4 of the Illustrations.

The identical section is presently under construction in the Bay Area and is being built under contract to the San Francisco Bay Area Rapid Transit District and is referred to as the Transbay Tube connecting San Francisco and Alameda Counties.

Because the State of California, through its Department of Public Works and Division of Bay Toll Crossings, is funding the construction of the Transbay Tube and its approaches, all questions relating to design and construction of this project are fully known to these agencies. Therefore, we will not comment on this Transit Section since the contract documents and the contract price are matters of public record and available for all to review.

d) Recommended Vehicular Section

The section selected for quantity take-off and pricing of a subaqueous vehicular tube is that entitled "Section D-3E" and shown on Fig. 6 of the Illustrations. It has been described and commented upon in the preceding section. We fully recognized and concurred in the overall goal of the Division of Bay Toll Crossings, namely, their requirements that any cost estimate prepared for vehicular or transit tube or a combination of both must be realistic and must be based on the concepts of a workable and economic cross-section along with an alignment across the Bay between San Francisco and Marin Counties that was feasible from point of view of design engineering and marine construction. Certain of the alternative tube configurations could be designed and built with approximate equal facility. However, preliminary pricing evaluation of such alternatives showed apparent cost increases over and above the selected Section D-3E; hence, it was concluded that the selected section represented the optimum from point of view of design, construction, traffic handling requirements, and cost.

4. Structural Design of Tube

a) Design Criteria - Specifications and Controls

7. Conclusions

a) Location

Five principal crossing routes have been investigated in this study, all of which are shown on Fig. 1 of the illustrations.

Lines T-1 and T-1A begin in San Francisco near Telegraph Hill and terminate north of Sausalito on the west shore of Richardson Bay. These two routes, which would encounter rock in the vicinity of Alcatraz Island, would pass through deep water in Raccoon Strait, are the longest of those studied and hence, the most costly. For these reasons, and also because of the difficulty in connecting with existing freeways in San Francisco, these lines are not considered attractive for either a rapid transit or a vehicular crossing.

The shortest crossing route studied is Line T-2, which begins at Aquatic Park in San Francisco and enters Marin County via the Tiburon peninsula. However, there are inherent disadvantages in this line in that it encounters terrain on Angel Island and the Tiburon peninsula that requires costly excavation. Particularly, in crossing the deep water of Raccoon Strait, this alignment in order not to exceed the maximum grades established would require tunnel construction at unnecessary, deep depths. The construction costs necessary to make this route acceptable do not justify its selection.

Line T-3 represents the alignment considered most favorable for a rapid transit crossing. From near Aquatic Park in San Francisco, this line crosses the Bay in a direct route and terminates in southern Sausalito. The Bay bottom is of a favorable depth and the crossing is relatively short. While an optimum selection for a rapid transit tube, this line is not particularly attractive for a vehicular crossing because of the disruption of downtown Sausalito that the highway approach structures would cause.

Line T-4B was investigated in order to avoid the problems encountered in a Line T-3 vehicular crossing, namely, the disruption of downtown Sausalito. A tube crossing on this alignment would not require significant rock excavation or the passing through excessively deep water, but it is longer than T-3 and as a result would be more costly.

Line T-5 is the route considered to be most advantageous for a vehicular tube or a combined vehicular and rapid transit crossing. Beginning near Aquatic Park in San Francisco, this line crosses the Bay

slightly to the east of Line T-3 and terminates north of Sausalito. Downtown Sausalito would not be disrupted, water depths are acceptable and there appears to be an absence of high bedrock profiles.

In summary, of the five various routes considered, Line T-3 represents the alignment most favorable for a rapid transit underwater tube crossing. For a vehicular or a combined vehicular-rapid transit crossing, Line T-5 is the route considered most feasible.

b) Tube Sections

Rapid Transit--Provision for rapid transit may be either by means of a separately constructed tube of two trackways or by combining the trackways within a larger section that provides lanes for vehicular traffic. The separate rapid transit tube is feasible from both a design and construction viewpoint, since this type tube is currently under construction for the Bay Area Rapid Transit District.

Vehicular

In this Report a review was made of a number of cross-sections that received serious consideration for vehicular type tunnel crossings and in certain instances a combination tunnel in which rapid transit as well as vehicular traffic was accommodated.

As a result of these studies, the supported type sections were not considered favorably, due primarily to exposure above the Bay bottom which would subject them to the possibility of serious damage or destruction. In addition, these sections being buoyant require the construction of foundation supports in the form of well anchored structural tension members. Lastly, the great size of these supported sections carrying both vehicular and rapid transit traffic would present fabrication and laying problems currently without precedent in the construction industry.

Multi-tube tunnels of circular configuration, although quite feasible from a construction standpoint since they lend themselves to mass production techniques, are nonetheless uneconomical in view of the great width of dredged trench required for their installation, and in addition, the great number of individual joints would make connecting of these sections laborious and expensive.

The single large circular cross-section providing both highway and rapid transit facilities is not considered feasible due to its extreme diameter, poor utilization of its cross-sectional space and the need for an extremely deep dredged trench.

Single level and double level box sections are feasible and have much to recommend them. Actually, if in the future a tunnel is deemed the acceptable crossing means of joining San Francisco and Marin Counties, then full and detailed consideration and study should be given to these sections as possible alternatives.

Finally, Section D-3E with a separate transit tube accommodated in a single trench, is both feasible and from the results of our studies appears to be the most attractive from a construction and cost standpoint.

c) Design

All basic criteria establishing geometrics, navigation requirements, ventilation requirements, control of structural elements including required factors of safety have received the most careful study and evaluation prior to being set forth in this Report. These criteria, based on long usage in the various agencies, have survived the test of time and have proved fully workable for tunnel construction of this nature throughout the world.

The rapid transit tube conforms to established criteria and is both feasible and economical. A transit tube of this design is currently under construction in the Bay Area.

The vehicular tube, Section D-3E, based on a preliminary yet comprehensive design analysis, working within the framework of the established criteria, is considered a fully adequate structure capable of sustaining static and dynamic forces to which it would be subjected.

Ventilation requirements for the tunnel crossings can be met and fall within the ventilation criteria established for them. For a separate rapid transit tube the problem of ventilation is not significant and has been met in the tube currently under construction in the Bay Area. For the vehicular tube the ventilation problem is particularly significant. However, with the introduction of ventilation buildings at predetermined distances throughout the alignment, adequate provision has been made for the introduction of fresh air and the exhausting of the vitiated air, utilizing economical tunnel cross-sections, building sizes and fan capacities.

d) Cost

Engineering and construction costs have been estimated for the two most favorable crossing routes, Lines T-3 and T-5. For Line T-3, which is for rapid transit only and for the rapid transit portion of Line T-5,

material quantities are based on comparable units used in the Transbay Tube referred to above. For the vehicular portion of Line T-5, utilizing the favorable Section D-3E, quantities were computed.

The subaqueous tube costs presented in this Report are based on a realistic and workable tube section and are sufficiently accurate for a preliminary cost estimate.

It is essential to note that the cost estimates presented in this Report are based on an assumed bid date of January, 1967. If a decision were to be reached to construct an underwater tube crossing, past experience indicates that the cost estimates would necessarily have to be escalated to account for the effects of inflation.

e) Soils

Since the recently completed geophysical surveys furnished only limited information concerning the in-situ soils in which the tubes would be located, further detailed and comprehensive exploratory boring programs and laboratory testing of soil samples should be undertaken prior to the preparation of final designs.

f) Feasibility

Based on information available at the present time, a subaqueous tube crossing for rapid transit alone,or for combined rapid transit and vehicular traffic, between San Francisco and Marin Counties is feasible from point of view of engineering design and construction.

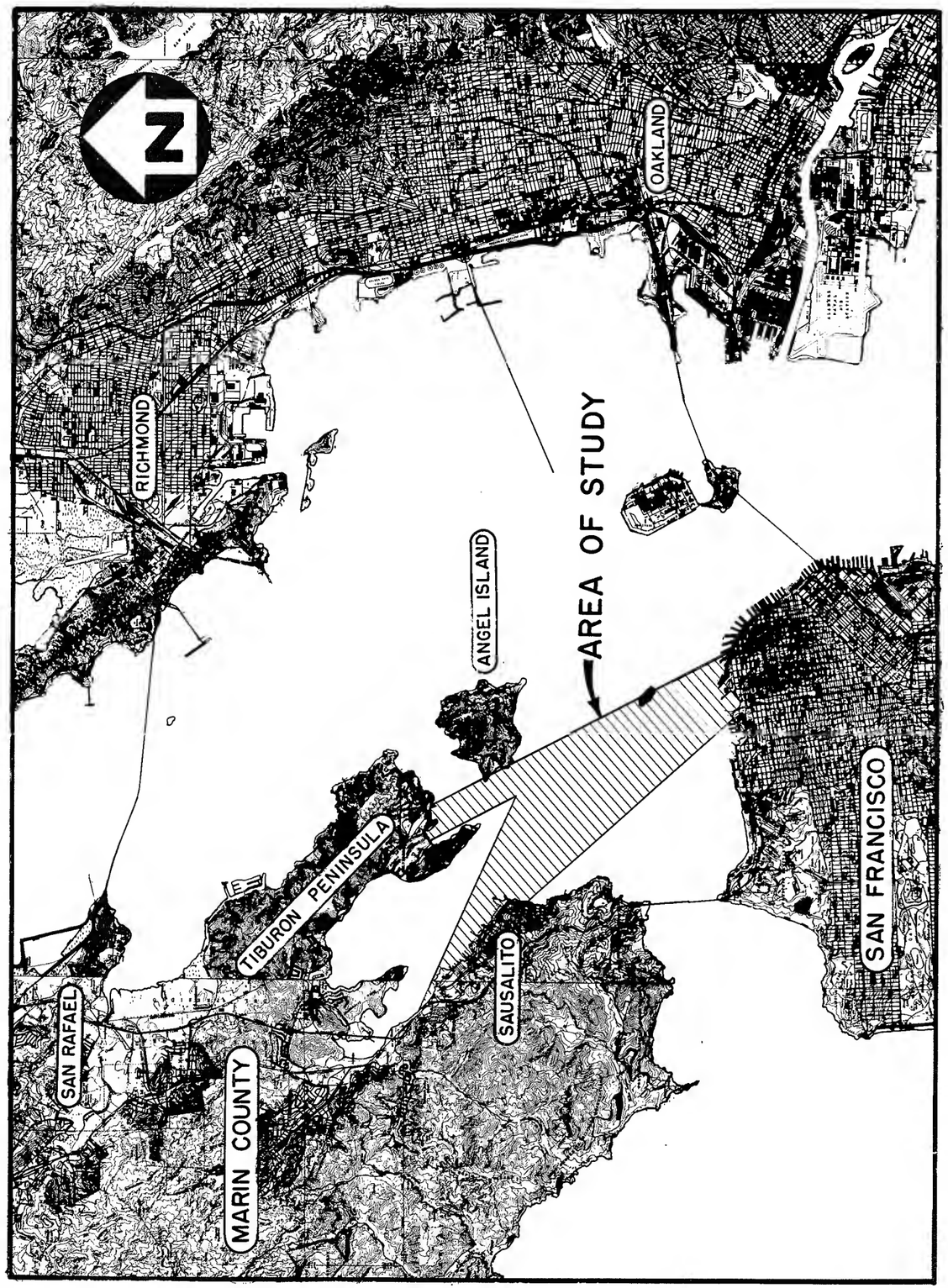

Tubes S.F. Bay

#5916416

STATE OF CALIFORNIA
DEPARTMENT OF PUBLIC WORKS
DIVISION OF BAY TOLL CROSSINGS

SAN FRANCISCO – MARIN CROSSING UNDERWATER TUBE ALTERNATIVES

FINAL ENGINEERING REPORT

April, 1967

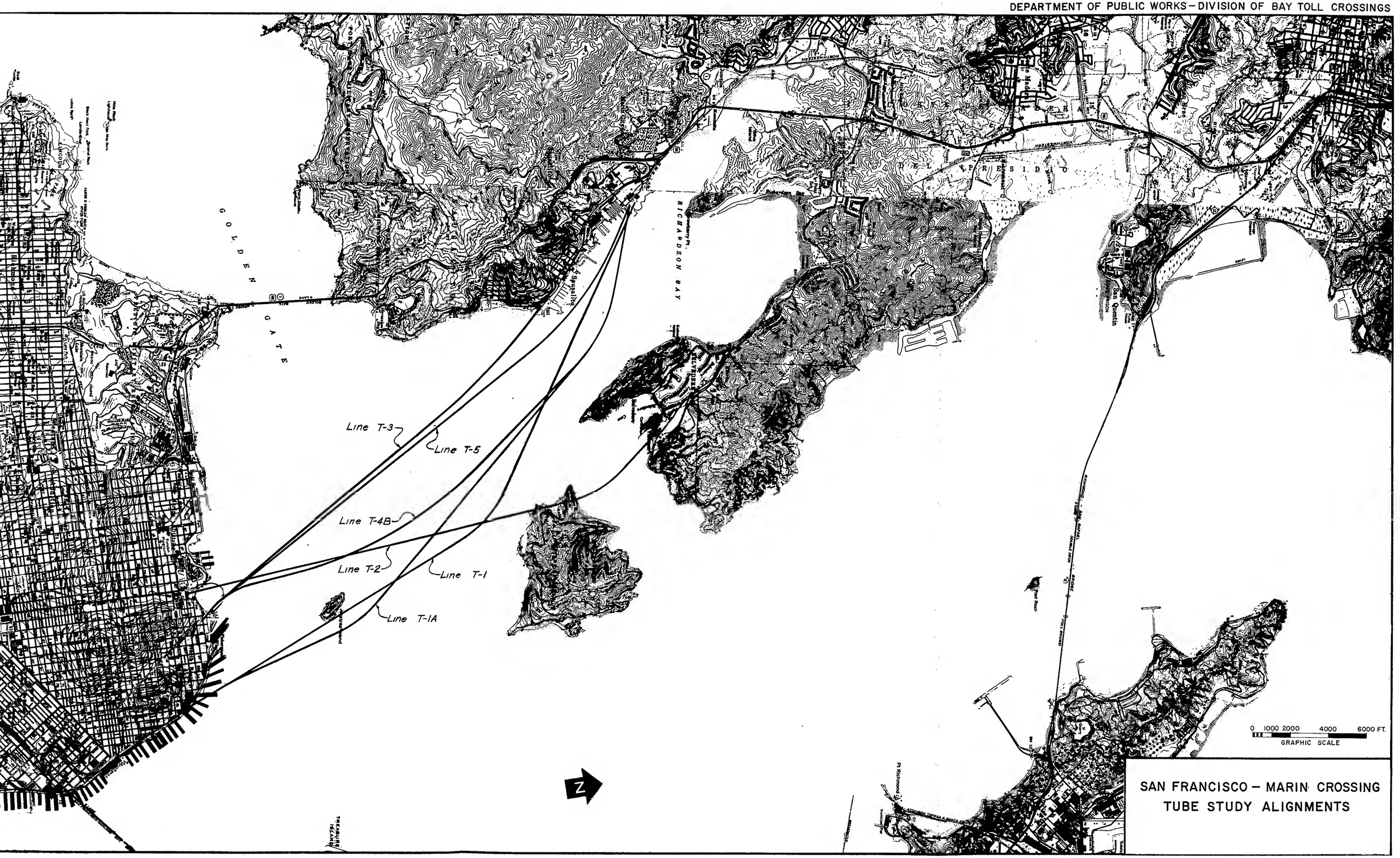

SAN FRANCISCO – MARIN CROSSING
TUBE STUDY ALIGNMENTS

Fig. 1

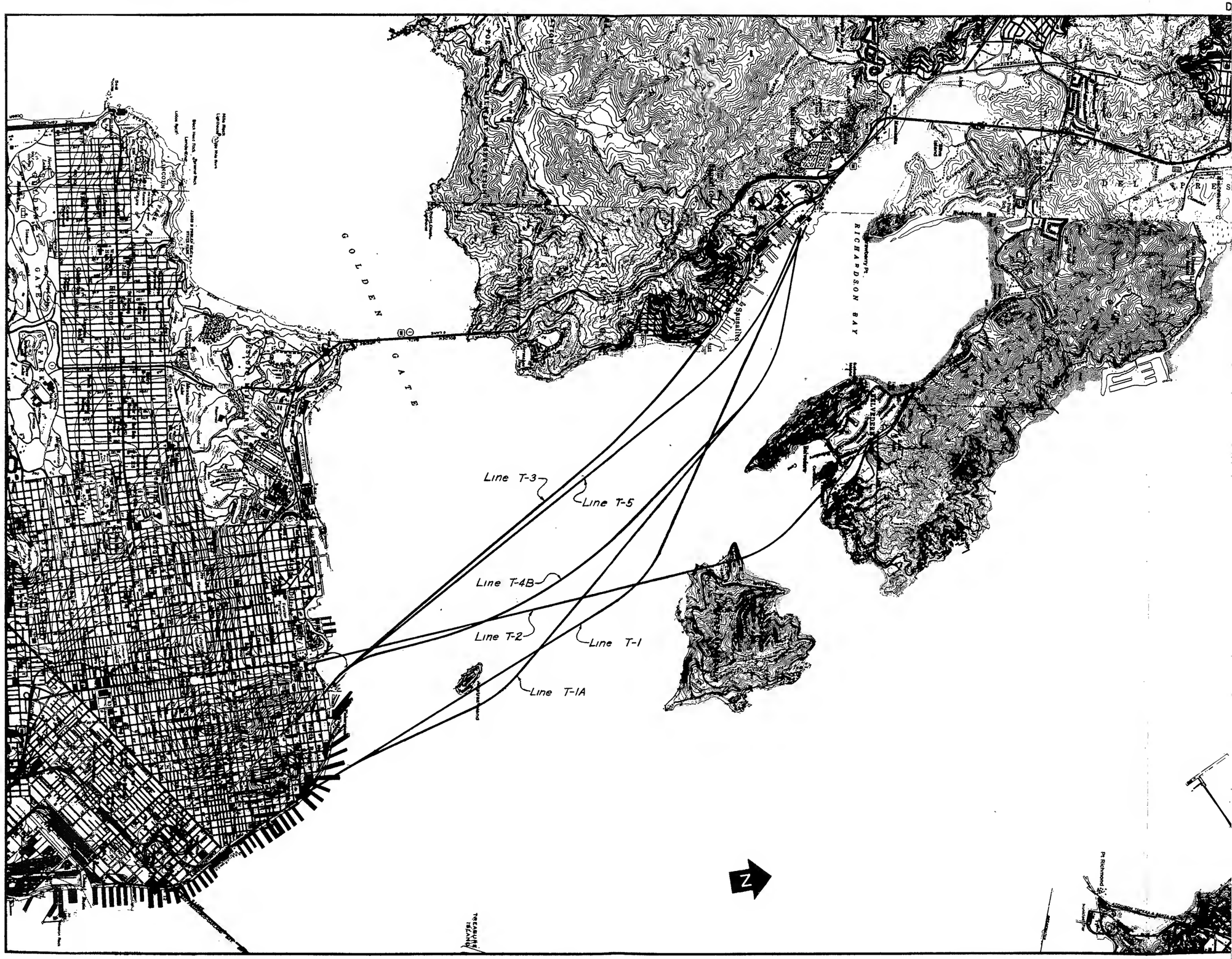
GOLDEN GATE
RICHARDSON BAY
Line T-3
Line T-5
Line T-4B
Line T-2
Line T-1
Line T-1A
N

P.B.Q. & D., Inc.

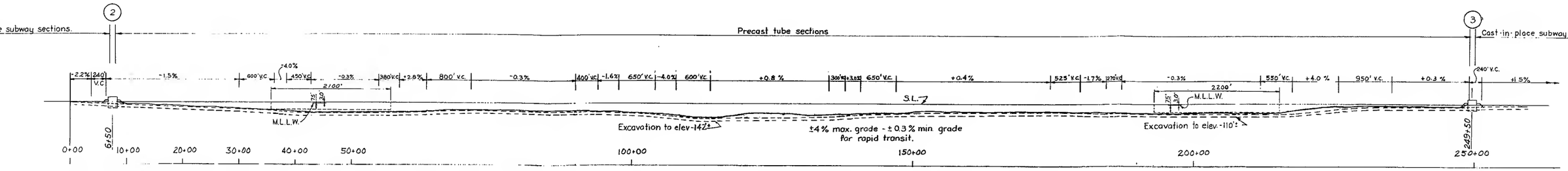

ELEVATION

VERT. 0 200 400 800 1200 FT.
HORIZ. 0 400 800 1600 2400 FT.
GRAPHIC SCALE

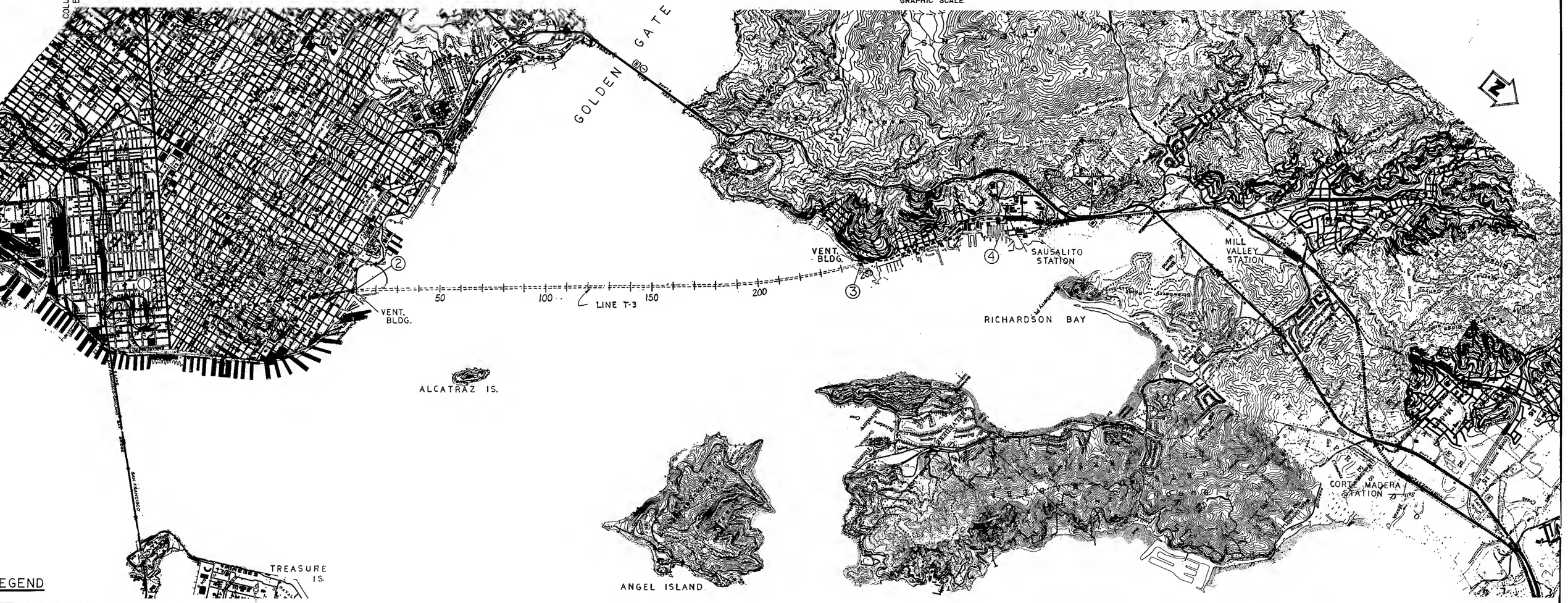

PLAN

0 1000 2000 4000 6000 FT.
GRAPHIC SCALE

LEGEND

- TOP OF WATER - M.S.L. 1929 U.S.C. & G.S.
- EXISTING GROUND LINE
- TOP OF TUBE COVER AND BOTTOM OF TUBE
- BOTTOM OF EXCAVATION

SAN FRANCISCO – MARIN CROSSING
PLAN AND PROFILE
LINE T-3

Fig. 2

Cast-in-place subway sections.

Precast tube sections

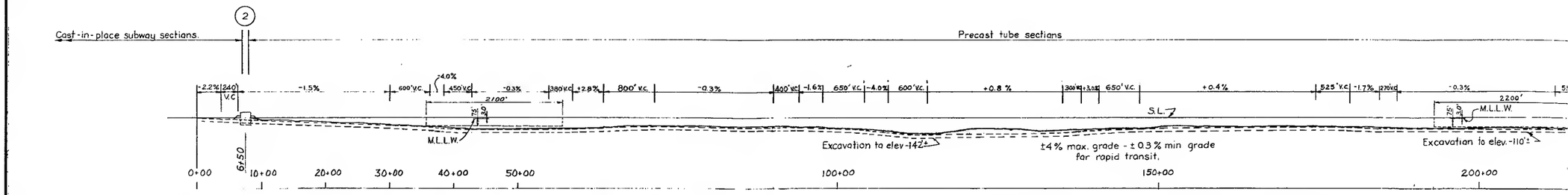

ELEVATION

VERT. 0 200 400 800 1200 FT.

HORIZ. 0 400 800 1600 2400 FT.

GRAPHIC SCALE

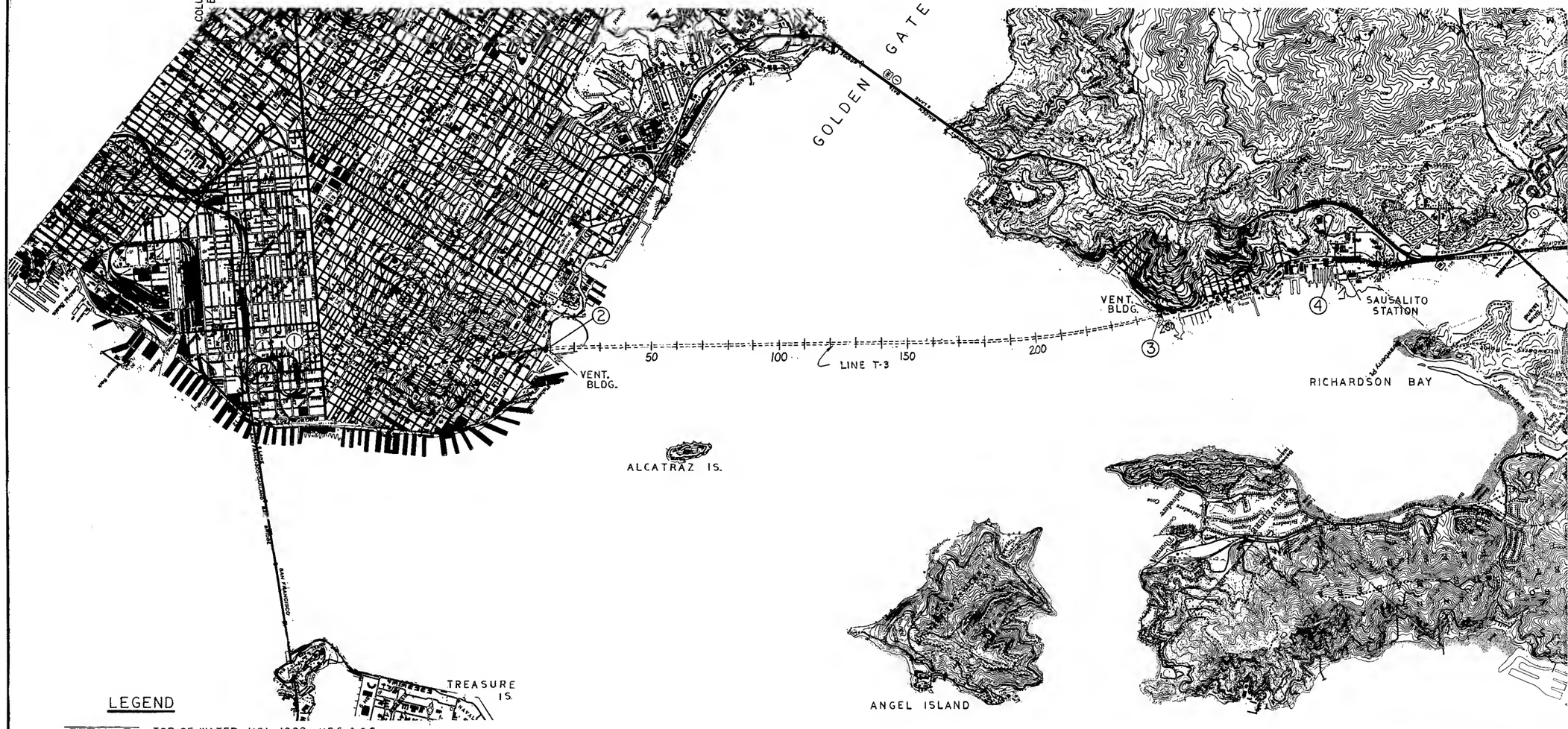

PLAN

0 1000 2000 4000

GRAPHIC SCALE

LEGEND

TOP OF WATER - M.S.L. 1929 U.S.C. & G.S.

EXISTING GROUND LINE

TOP OF TUBE COVER AND BOTTOM OF TUBE

BOTTOM OF EXCAVATION

T-1

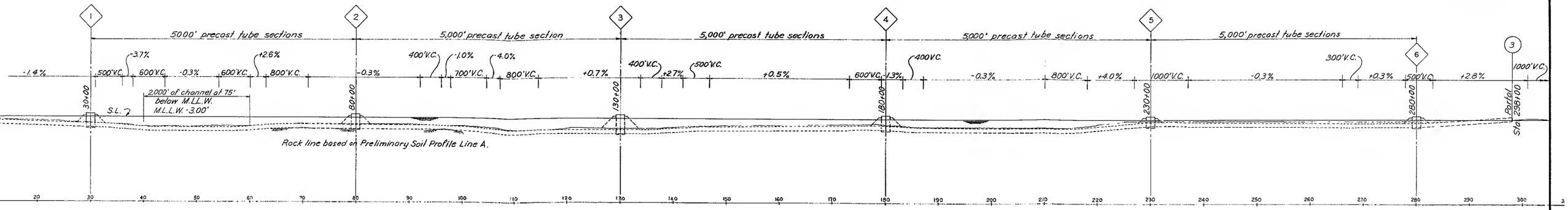

D

——— Waterline S.L. 1929 USC and GS.
——— Existing ground line.
– – – – Top of cover and bottom of tube.
Rock line.
◇ - Ventilation building number.
○ - Quantity break point.

ELEVATION

VERT. 0 200 400 800 1200 FT.
HORIZ. 0 400 800 1600 2400 FT.
GRAPHIC SCALE

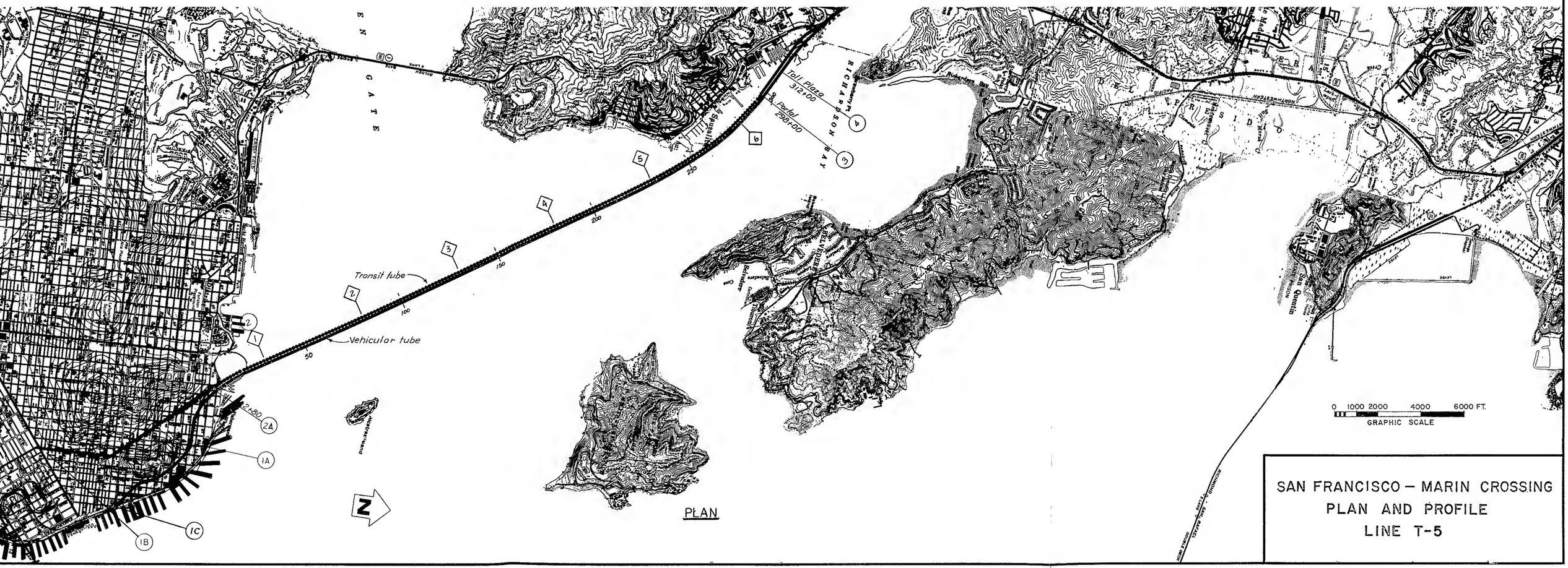

PLAN

SAN FRANCISCO — MARIN CROSSING
PLAN AND PROFILE
LINE T-5

Fig. 3

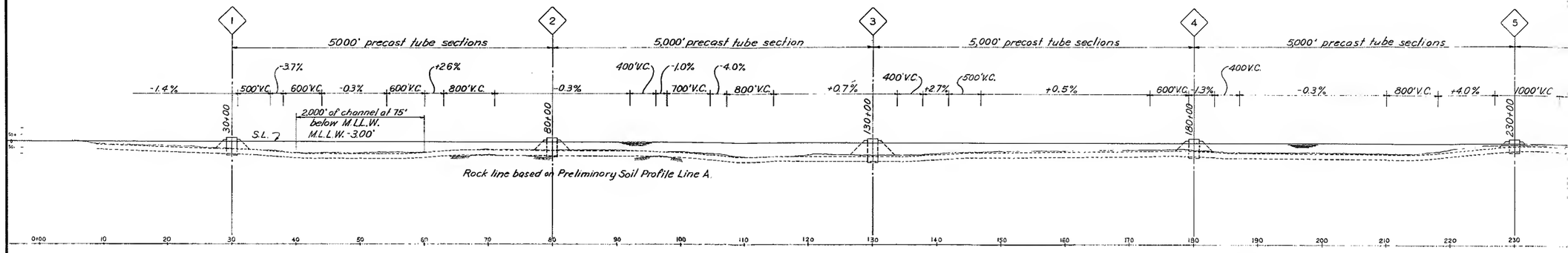

LEGEND

- Water line S.L. 1929 USC and GS.
- Existing ground line.
- Top of cover and bottom of tube.
- Rock line.
- ◇ - Ventilation building number.
- ○ - Quantity break point.

ELEVATION

VERT. 0 200 400 800 1200 FT.
HORIZ. 0 400 800 1600 2400 FT.
GRAPHIC SCALE

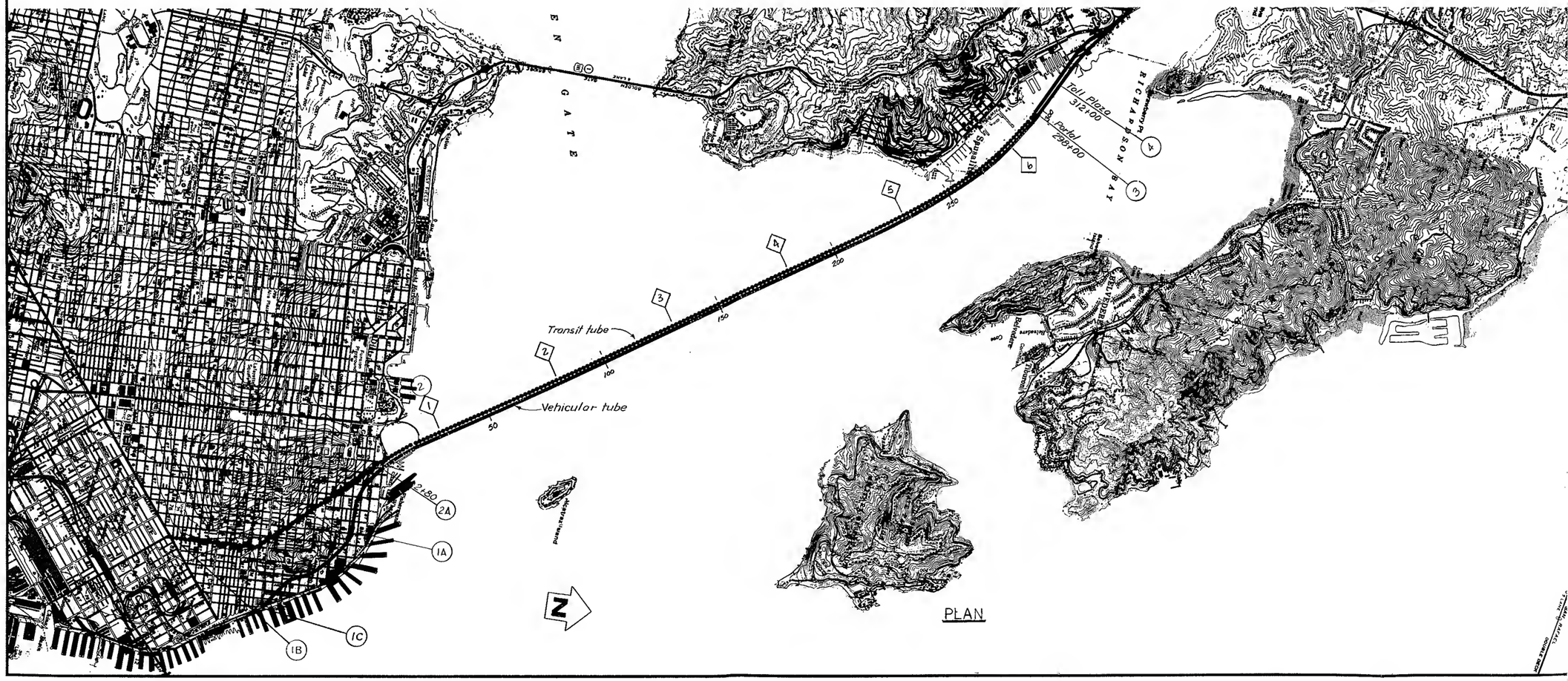

PLAN

TUBE DATA FOR SECTION AS SHOWN

Concrete ≃ 48.0 c.y.
Weight ≃ 193. K/lf.
Buoyancy ≃ 280. K/lf.
Net uplift ≃ 87. K/lf.

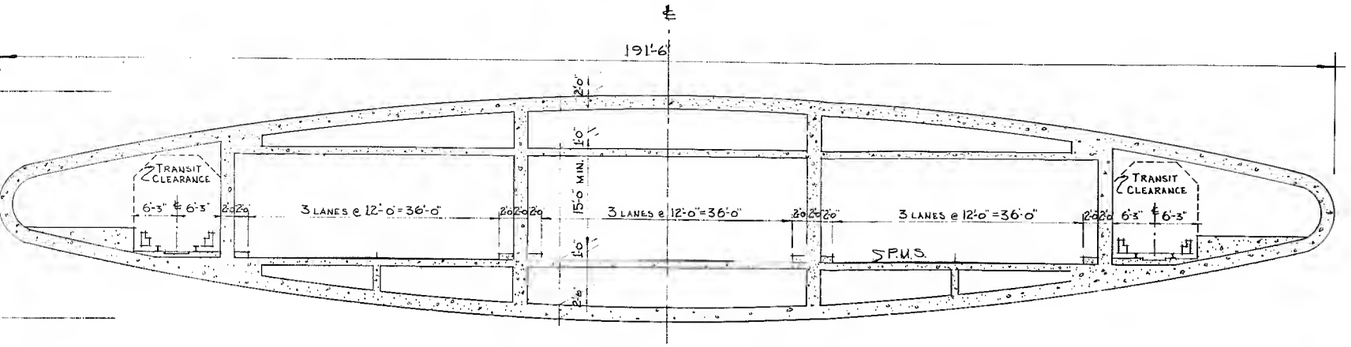

SUPPORTED* SECTION Nº 1

TUBE DATA FOR SECTION AS SHOWN

Concrete 67 c.y./lf.
Weight 270 K/lf.
Buoyancy 325 K/lf.
Net uplift 55 K/lf.

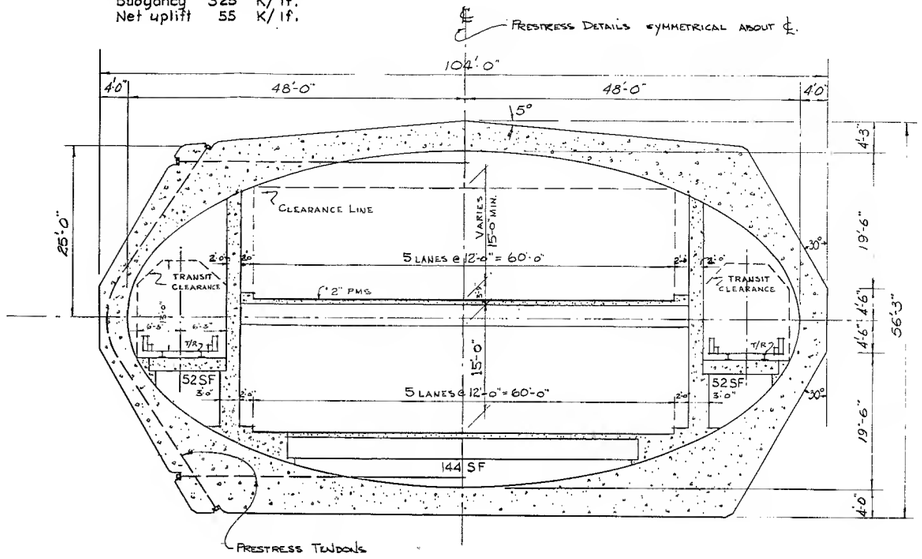

SUPPORTED* SECTION Nº 2

TUBE DATA FOR ONE VEHICULAR TUBE

Concrete	16.45 c.y/l.f.	Including Joints
Weight	66.65 k/l.f.	
Buoyancy	74.67 k/l.f.	
Net Weight	8.02 k/l.f.	

TUBE DATA FOR TRANSIT TUBE

Concrete ≃ 15.0 c.y./lf. incl. joints.
Weight ≃ 62.6 K/lf. incl. allowance 2525 #/lf. of structural steel reduced for conc. displacement.
Buoyancy ≃ 59.4 K/lf.
Downward 3.2± K/lf.

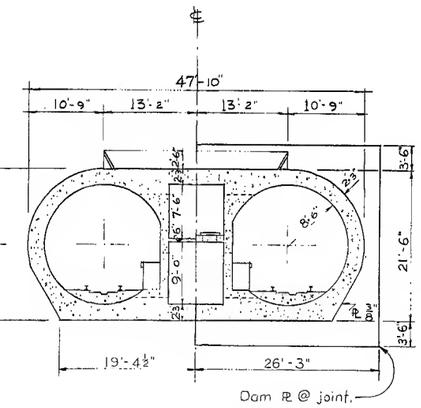

TRANSIT SECTION

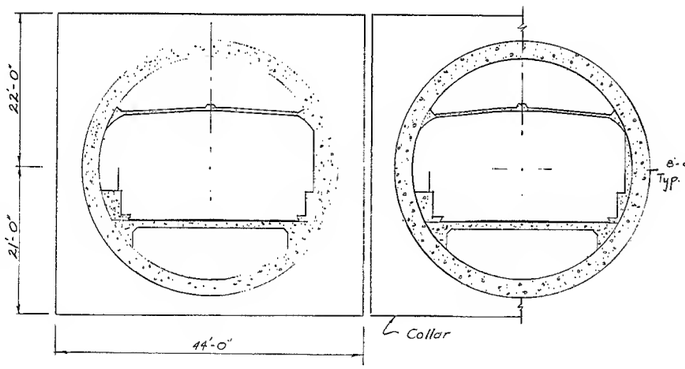

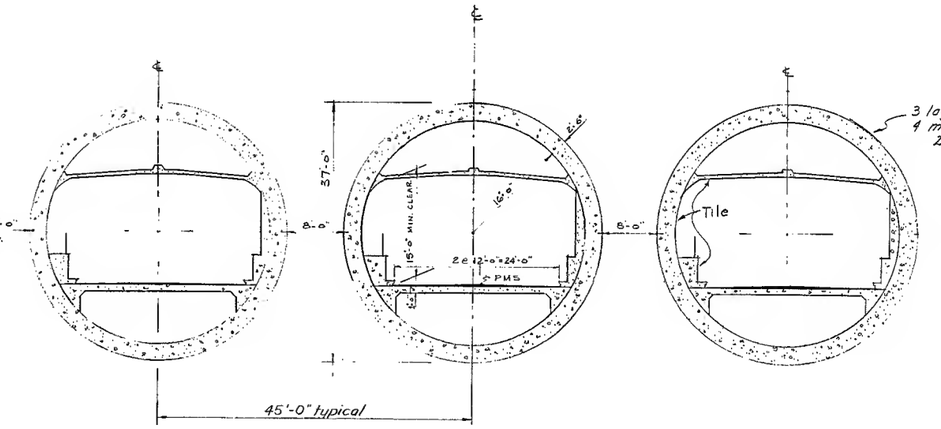

MULTI TUBE SECTION
(SECTION D)

* THESE SECTIONS SUPPORTED ABOVE EXISTING BAY BOTTOM ON PILES OR CAISSONS

0 5 10 20 30 FT.
GRAPHIC SCALE

SAN FRANCISCO – MARIN CROSSING

TUBE SECTIONS-SHEET I

Fig. 4

TUBE DATA FOR SECTION AS SHOWN

Concrete ≃ 48.0 c.y.
Weight ≃ 193. K/lf.
Buoyancy ≃ 280. K/lf.
Net uplift ≃ 87. K/lf.

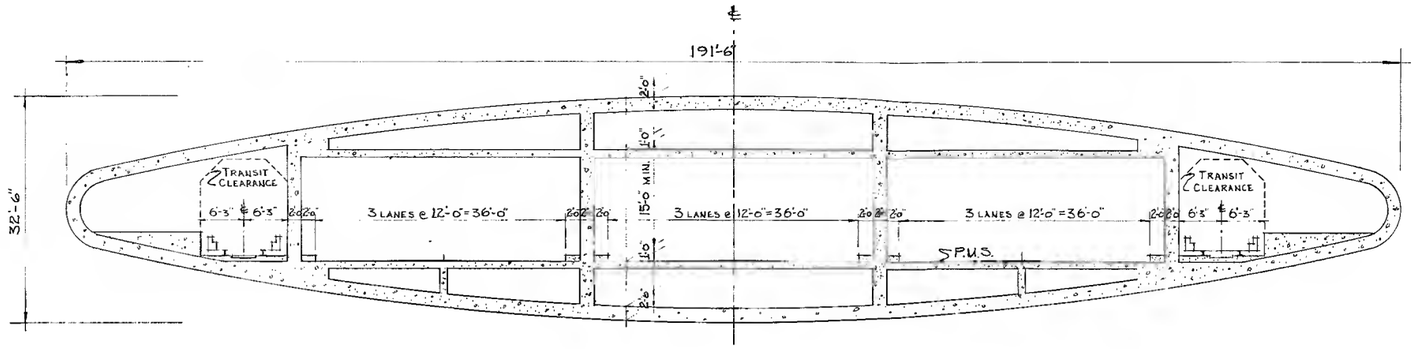

SUPPORTED* SECTION Nº 1

TUBE DATA FOR SEC

Concrete 67 c.y./lf
Weight 270 K/lf
Buoyancy 325 K/lf
Net uplift 55 K/lf

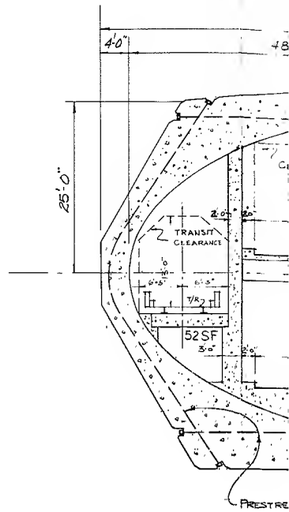

TUBE DATA FOR TRANSIT TUBE

Concrete ≃ 15.0 c.y./lf. incl. joints.
Weight ≃ 62.6 K/lf incl allowonce 2525 #/lf. of structural steel reduced for conc. displacement.
Buoyancy ≃ 59.4 K/lf.
Downward 3.2± K/lf.

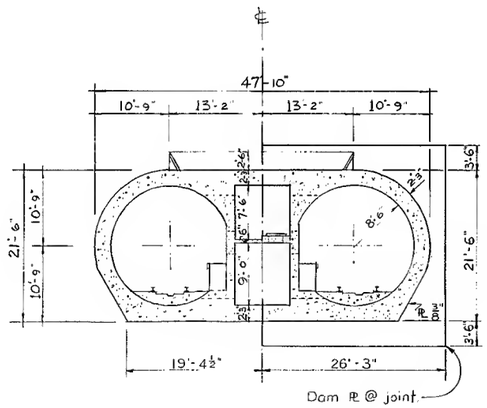

TRANSIT SECTION

TUBE DATA FOR ONE VEHICULAR TUBE

Concrete	16.45 c.y./l.f.	Including Joints
Weight	66.65 k/l.f.	
Buoyancy	74.67 k/l.f.	
Net Weight	8.02 k/l.f.	

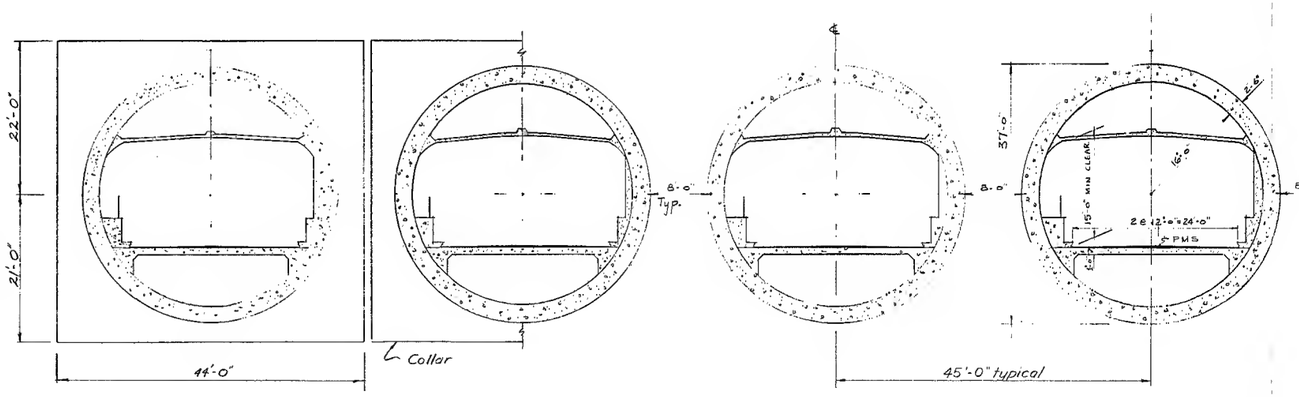

MULTI TUBE SECTION
(SECTION D)

G2

TUBE DATA FOR SECTION AS SHOWN

Concrete ≃ 55.6 cy/lf. Additional exterior concrete required to balance uplift = 17.4 cy, Σ = 73.0 c.y.
Weight ≃ 225 K/lf. The walls would then be ≃ 6' thick.
Buoyancy ≃ 256 K/lf.
Net uplift ≃ 31 K/lf

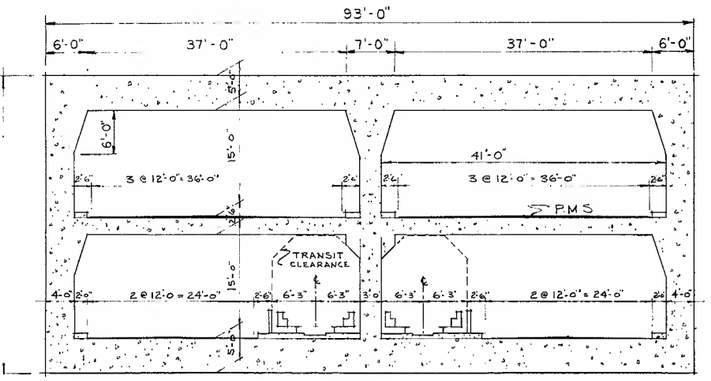

DOUBLE LEVEL BOX
(SECTION C-3)

TUBE DATA FOR SECTION AS SHOWN

Concrete ≃ 65.0 c.y/lf.
Weight ≃ 263 K/lf.
Buoyancy ≃ 334+ K/lf.
Net Uplift ≃ 71 K/lf.

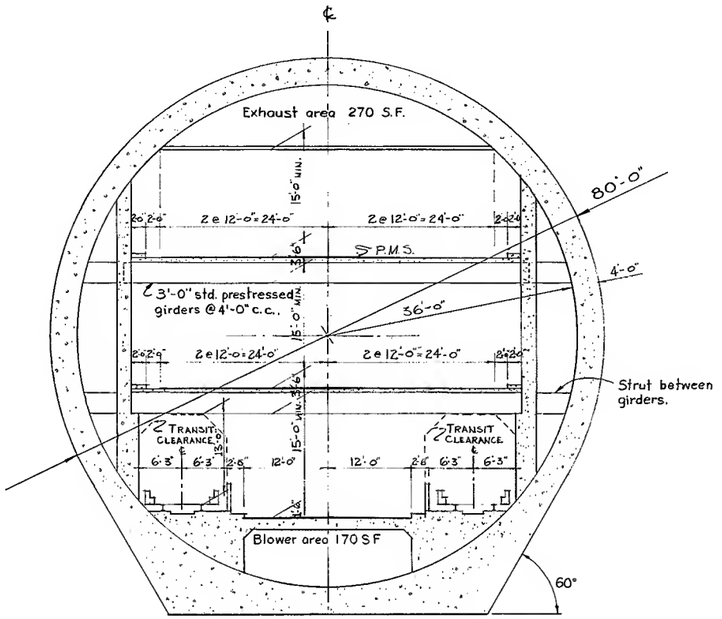

LARGE CIRCULAR
(SECTION B)

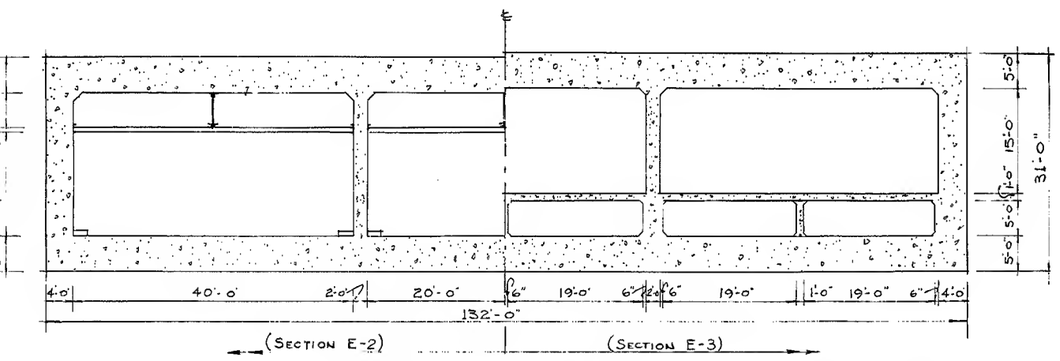

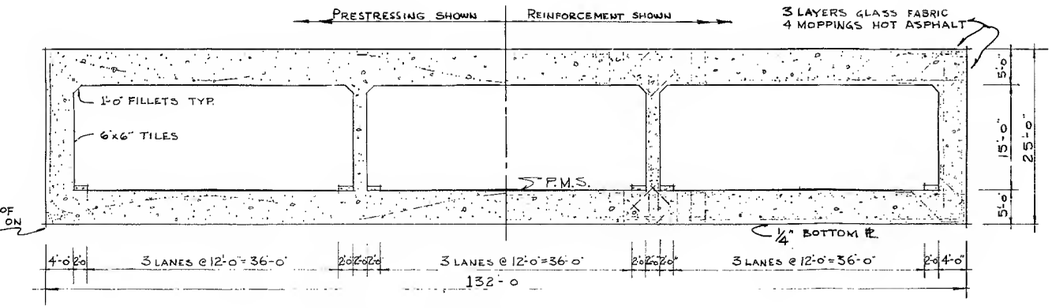

SINGLE LEVEL BOX
(SECTION E-1)

TUBE DATA FOR SECTION E-1

Concrete 56.0 cy/lf.
Weight 227.0 K/lf.
Buoyancy 211.0 K/lf.
Downward 16.0 K/lf.

0 5 10 20 30 FT.
GRAPHIC SCALE

SAN FRANCISCO — MARIN CROSSING

TUBE SECTIONS-SHEET II

Fig. 5

TUBE DATA FOR SECTION AS SHOWN

Concrete ≃ 55.6 cy/lf. Additional exterior concrete required to balance uplift = 17.4 cy, Σ = 73.0 c.y..
Weight ≃ 225 K/lf. The walls would then be ≃ 6' thick.
Buoyancy ≃ 256 K/lf.
Net uplift ≃ 31 K/lf

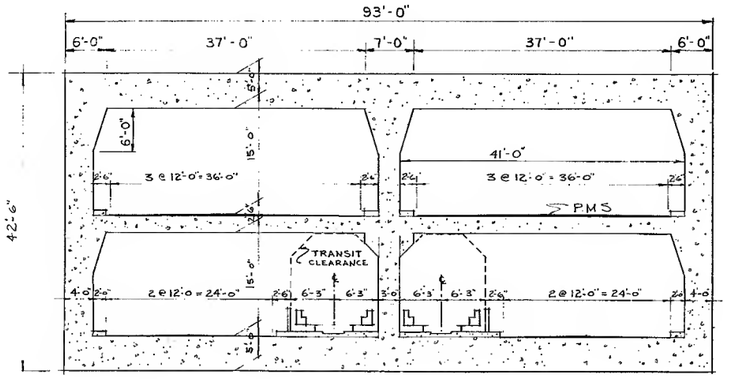

DOUBLE LEVEL BOX
(SECTION C-3)

TUBE DATA FOR SECTION AS SHOWN

Concrete ≃ 65.0 c.y./lf.
Weight ≃ 263 K/lf.
Buoyancy ≃ 334+ K/lf.
Net Uplift ≃ 71 K/lf.

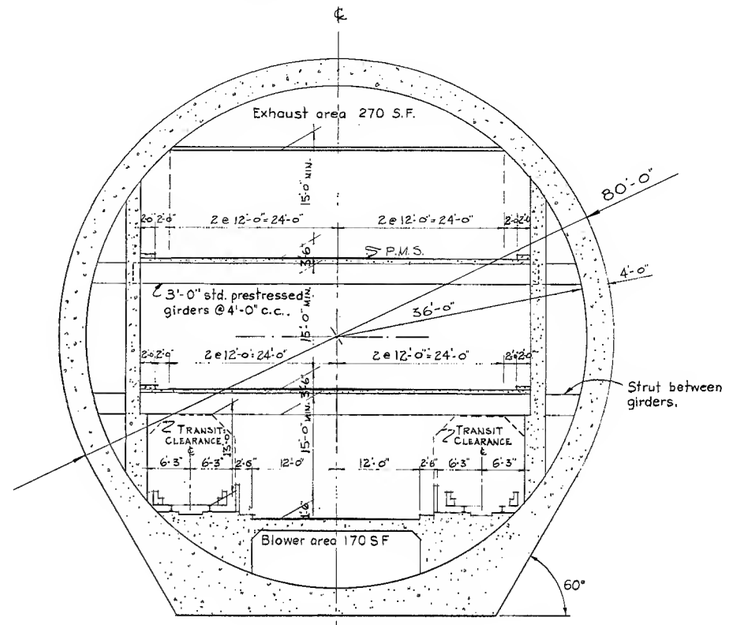

LARGE CIRCULAR
(SECTION B)

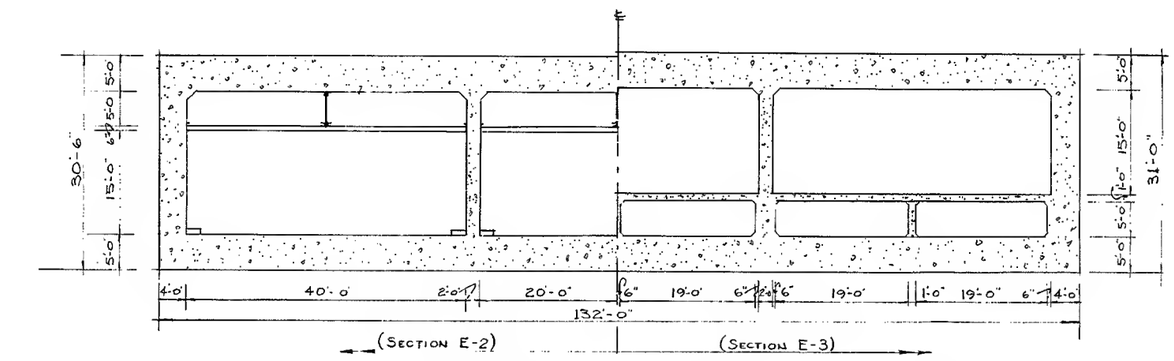

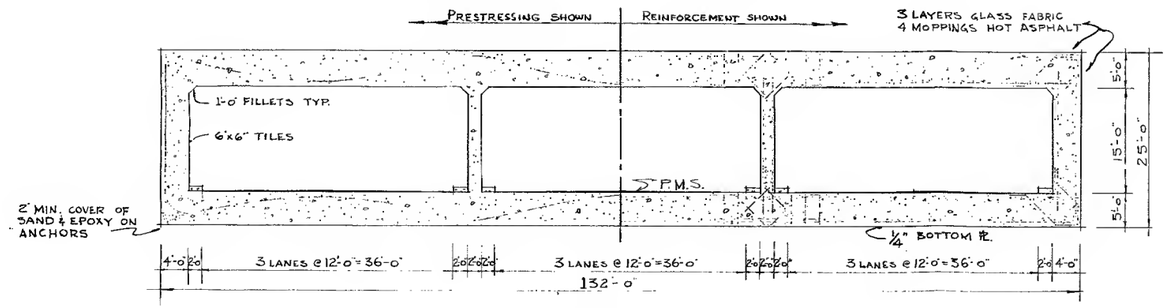

SINGLE LEVEL BOX
(SECTION E-1)

TUBE DATA FOR SECTION E-1

Concrete	56.0 cy/lf.
Weight	227.0 K/lf.
Buoyancy	211.0 K/lf.
Downward	16.0 K/lf.

G3

CULAR TUBE DATA

Total concrete: Vehicular and transit tubes = 78.4 cy/lf.

ete- 63.4 cy/lf.
---256.9 W/o structural steel, 261.8 K/lf. incl. 3/4" R and interior structural steel W/o bulkheads. (On Section as shown w/o Joints)
cy--247.7 K/lf.
e--4062.0 lbs./lf.
.28 with 7.5" cover

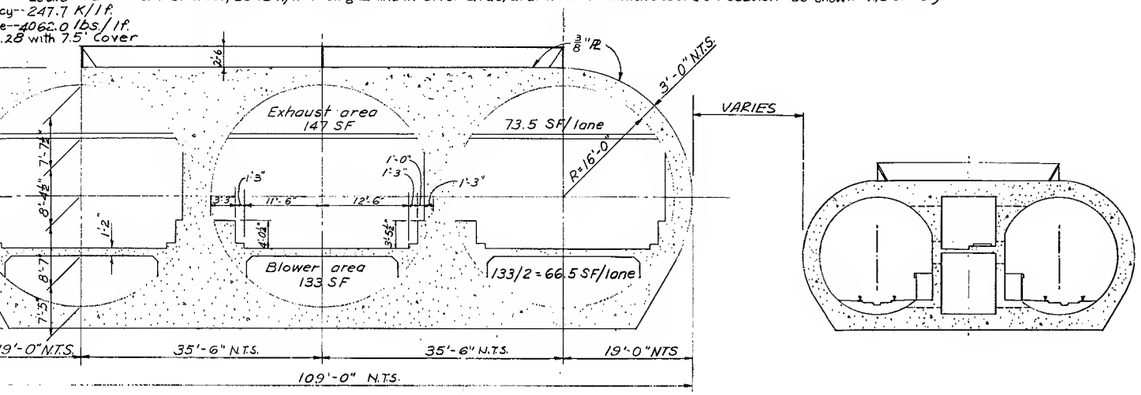

CULAR TUBE DATA
ete- 40.8 cy/lf.
--- 165.5 K/lf. (incl. R)
ncy- 162.8 K/lf.
e---

SECTION D-3E AND SEPARATE TRANSIT TUBE

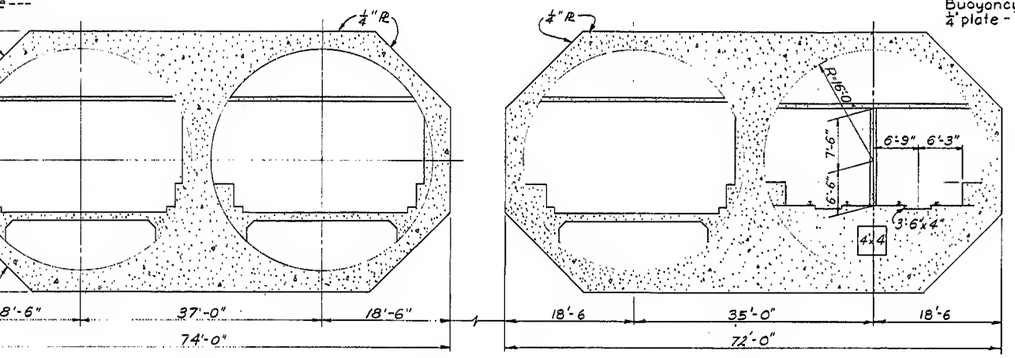

SECTION D-2C

COMBINED TUBE DATA
Concrete -- 43.1 cy/lf.
Weight --- 172.4 (incl R) K/lf.
Buoyoncy - 158.0 K/lf.
1/4" plate ---

ULAR TUBE DATA
te - 68.0 cy/lf.
--- 276.5 K/lf. (inc. R)
cy. 256.0 K/lf.
5.0' cover = 1.24
e -- 2190 lbs./lf.

Total concrete: 83.0 cy/lf

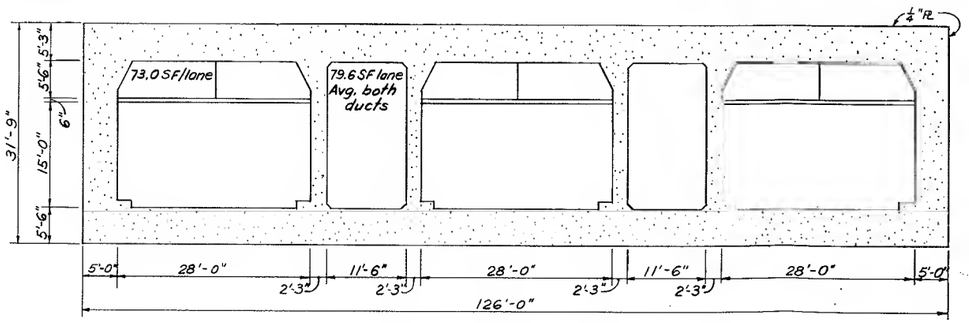

SECTION E-11 AND SEPARATE TRANSIT TUBE

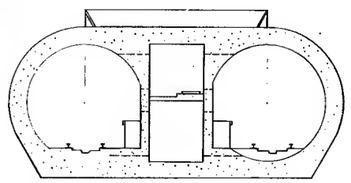

VEHICULAR TUBE DATA

Concrete-- 62.1 cy/lf.
Weight--- 252.0 K/lf. (inc. R)
Buoyancy- 250.3 K/lf.
1/4" plate--- 2800 lbs./lf.

Total concrete: Vehicular and transit tubes = 77.1 cy/lf.

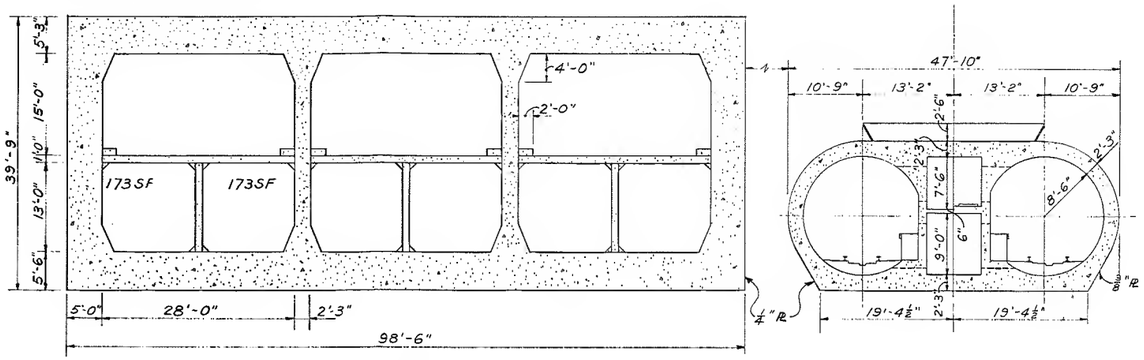

VEHICULAR TUBE DATA
Concrete - 44.4 cy/lf.
Weight --- 179.5 K/lf. inc. 1/4" R
Buoyancy - 164.2 K/lf.

SECTION E-7A AND SEPARATE TRANSIT TUBE

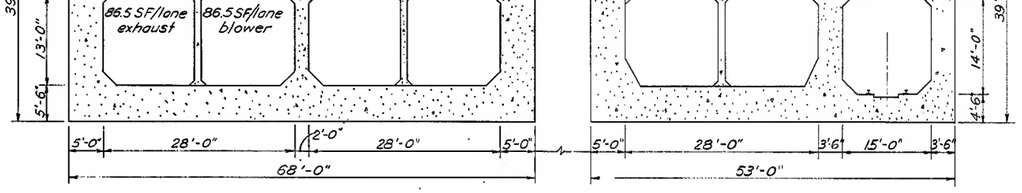

SECTION E-9

COMBINED TUBE DATA
Concrete- 36.6 cy/lf.
Weight-- 149.9 K/lf.
Buoyancy- 139.4 K/lf.

NOTE

N.T.S.= Not to scale.

0 5 10 20 30 FT.
GRAPHIC SCALE

SAN FRANCISCO – MARIN CROSSING
TUBE SECTIONS-SHEET III

Fig. 6

VEHICULAR TUBE DATA

Concrete- 63.4 cy/l.f.
Weight---256.9 w/o structural steel, 261.8 K/lf. incl. $\frac{3}{8}$ R. and interior structural steel w/o bulkheads. (On Section as shown w/o Joints)
Buoyancy--247.7 K/l.f.
$\frac{3}{8}$" plate--4062.0 lbs./lf.
S.F. = 1.28 with 7.5' Cover

Total concrete: Vehicular and transit tubes = 78.4 cy./l.f.

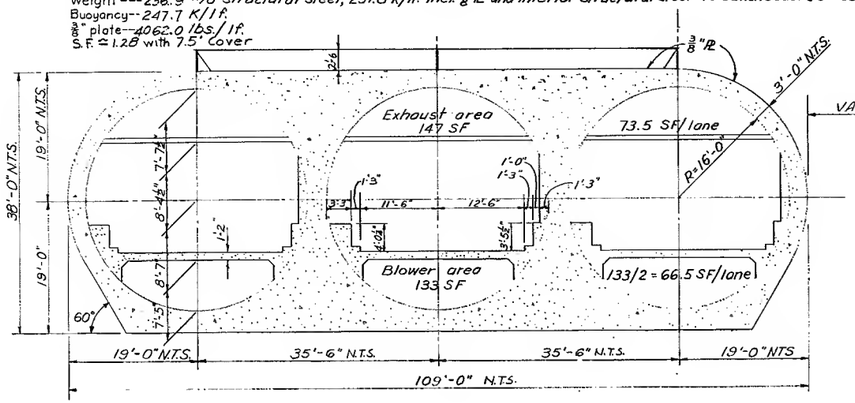

VEHICULAR TUBE DATA

Concrete-- 62.1 cy./lf.
Weight--- 252.0 K/lf. (inc. R)
Buoyancy- 250.3 K/lf.
$\frac{1}{4}$" plate--- 2800 lbs./lf.

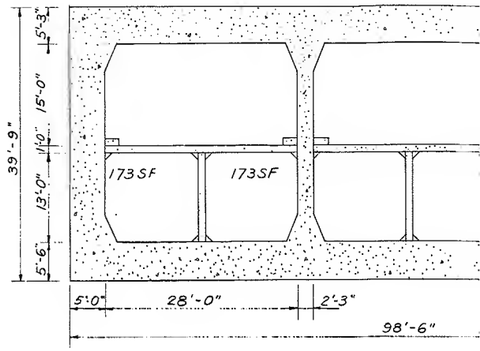

VEHICULAR TUBE DATA

Concrete- 40.8 cy./lf.
Weight--- 165.5 K/lf. (incl. R)
Buoyancy- 162.8 K/lf.
$\frac{1}{4}$" plate---

SECTION D-3E AND SEPARATE TRANSIT TUBE

COMBINED TUBE DATA

Concrete-- 43.1 CY/lf
Weight--- 172.4 (incl R) K/lf
Buoyancy- 158.0 K/lf
$\frac{1}{4}$" plate---

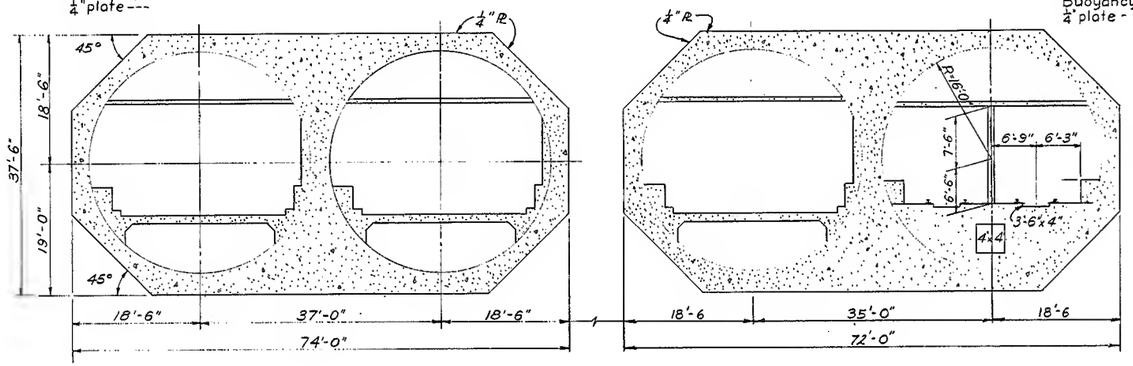

Light weight concrete interior this side

VEHICULAR TUBE DATA

Concrete - 44.4 cy/lf.
Weight--- 179.8 K/lf. inc. $\frac{1}{4}$" R
Buoyancy - 164.2 K/lf.

SECTION E-7

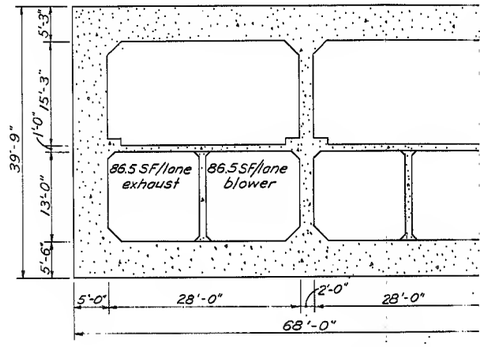

SECTION D-2C

SECTION E-9

VEHICULAR TUBE DATA

Concrete - 68.0 cy/lf.
Weight--- 276.5 K/lf. (inc. R)
Buoyancy- 256.0 K/lf.
S.F. with 5.0' cover = 1.24
$\frac{1}{4}$" plate -- 2190 lbs./lf.

Total concrete: 83.0 cy/lf

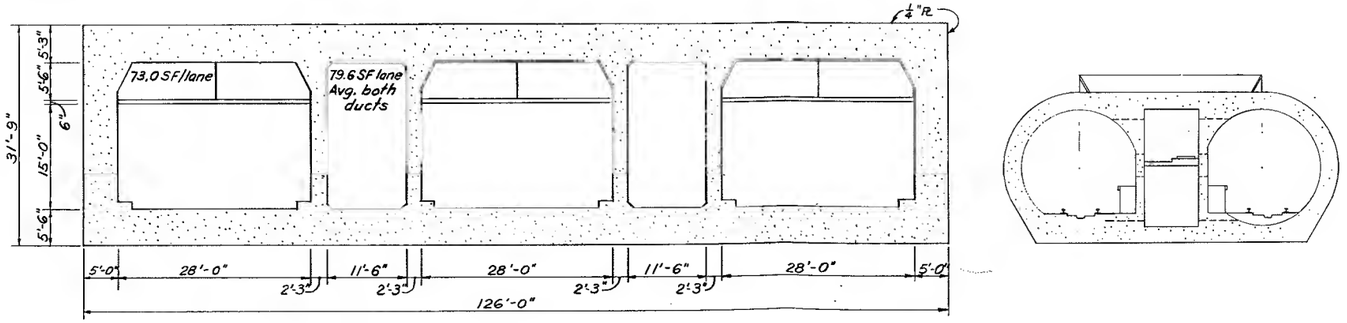

SECTION E-11 AND SEPARATE TRANSIT TUBE

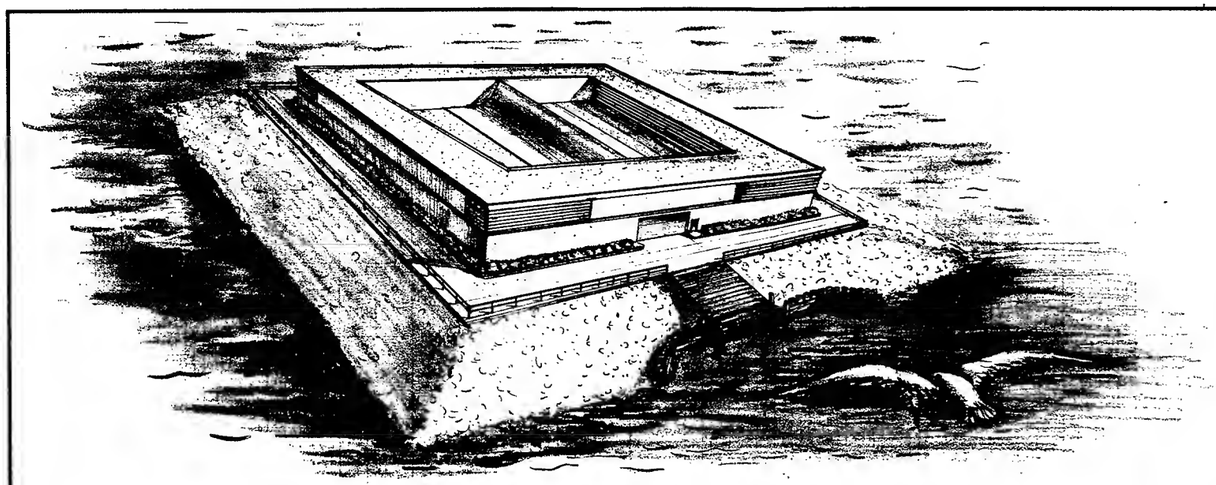

VENTILATION BUILDING

Ⓐ ELECTRICAL DISTRIBUTION EQUIPMENT.
Ⓑ FAN CONTROL PANELS
Ⓒ AIR INTAKE FANS.
Ⓓ AIR EXHAUST FANS.
Ⓔ AIR INTAKE LOUVERS.
Ⓕ AIR INTAKE SHAFT.
Ⓖ AIR INTAKE DUCT.
Ⓗ AIR EXHAUST DUCT.
Ⓘ AIR EXHAUST SHAFT.
Ⓙ AIR EXHAUST LOUVERS.
Ⓚ ELEVATOR
Ⓛ OFFICE.
Ⓜ MAINTENANCE SHOP.
DIRECTION OF AIR FLOW.

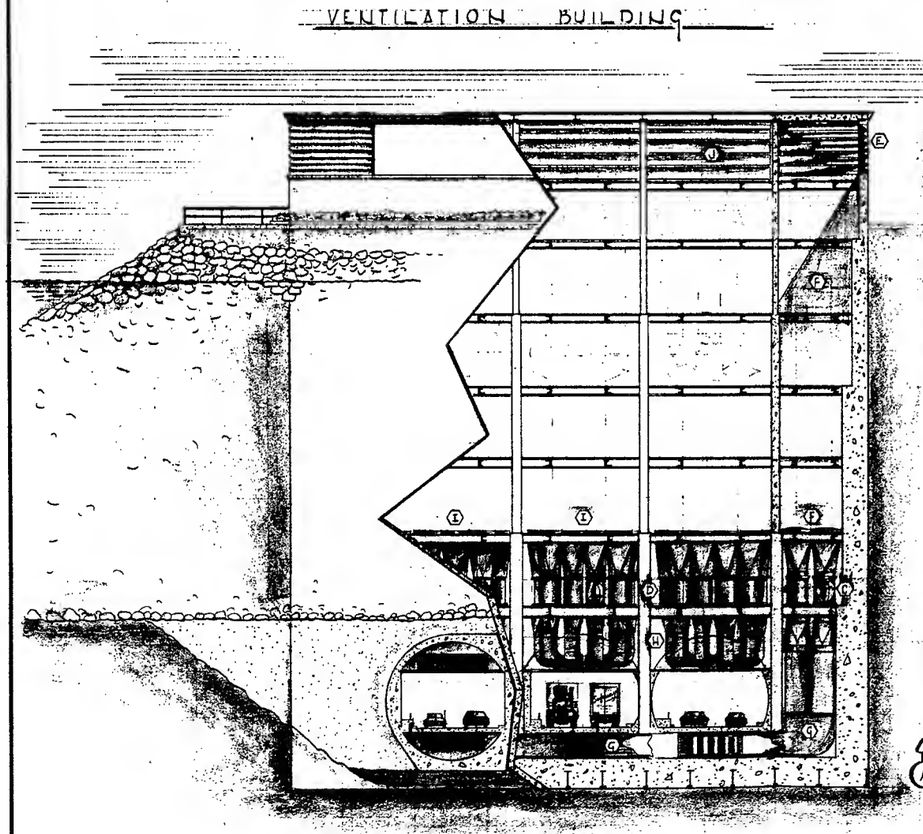

SECTION A-A

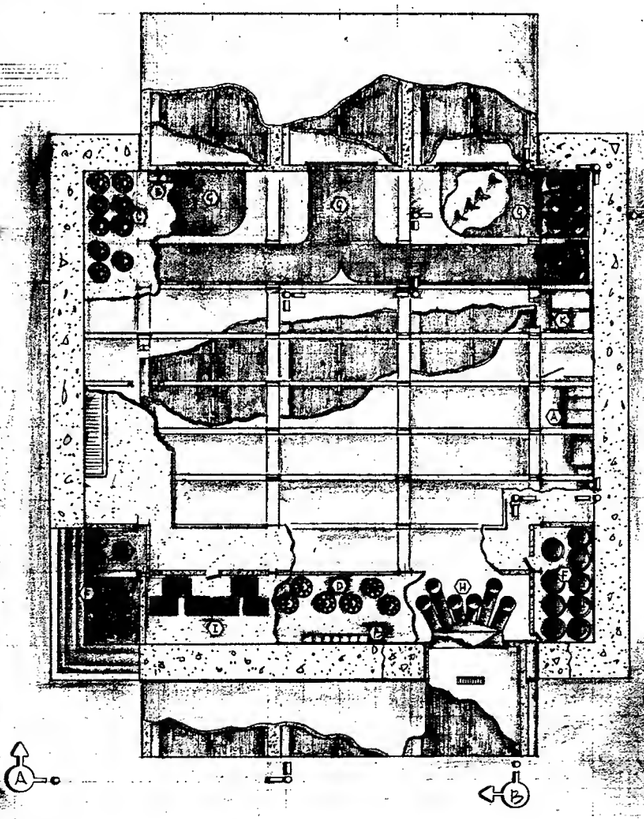

PLAN

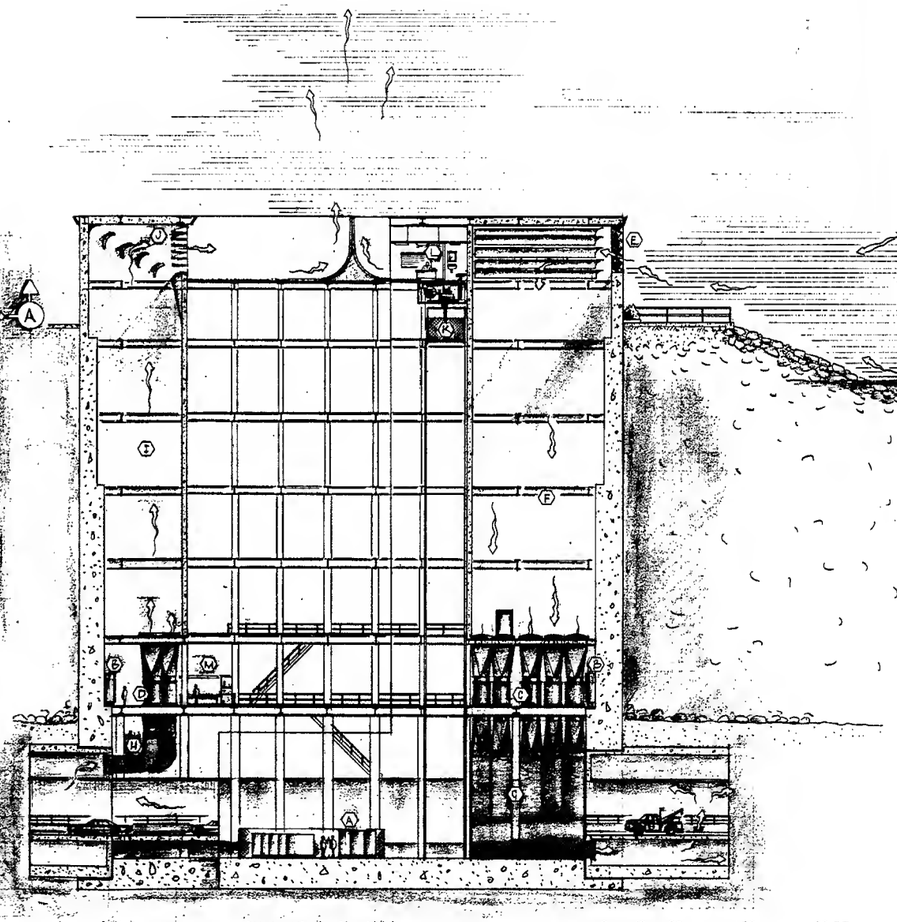

SECTION B-B

0 10 20 40 60 FT
GRAPHIC SCALE

SAN FRANCISCO – MARIN CROSSING
TYPICAL VENTILATION BUILDING-
VEHICULAR

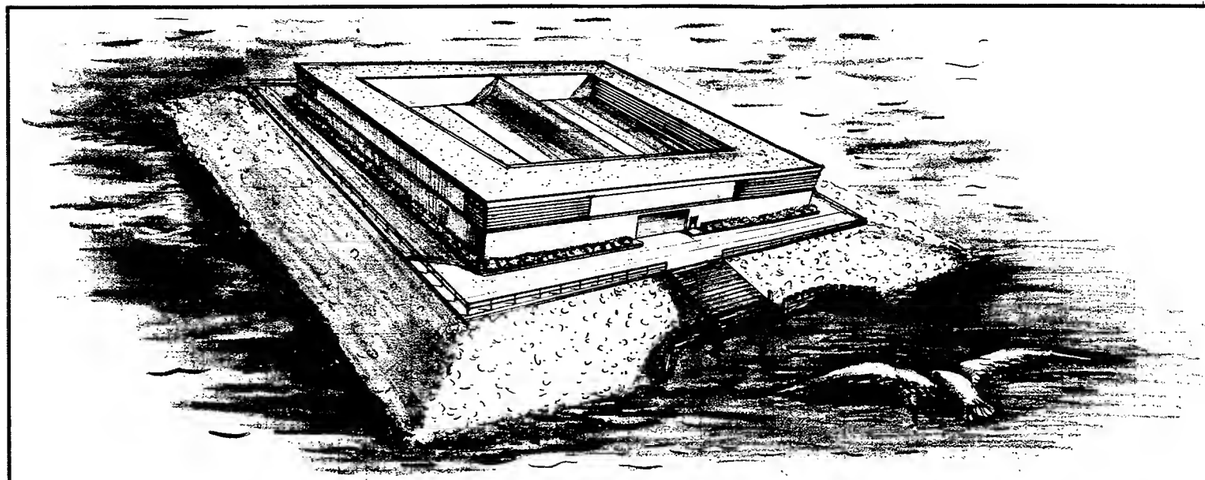

Ⓐ ELECTRICAL DISTRIBUTION EQUIPMENT.
Ⓑ FAN CONTROL PANELS
Ⓒ AIR INTAKE FANS.
Ⓓ AIR EXHAUST FANS.
Ⓔ AIR INTAKE LOUVERS.
Ⓕ AIR INTAKE SHAFT.
Ⓖ AIR INTAKE DUCT.

VENTILATION BUILDING

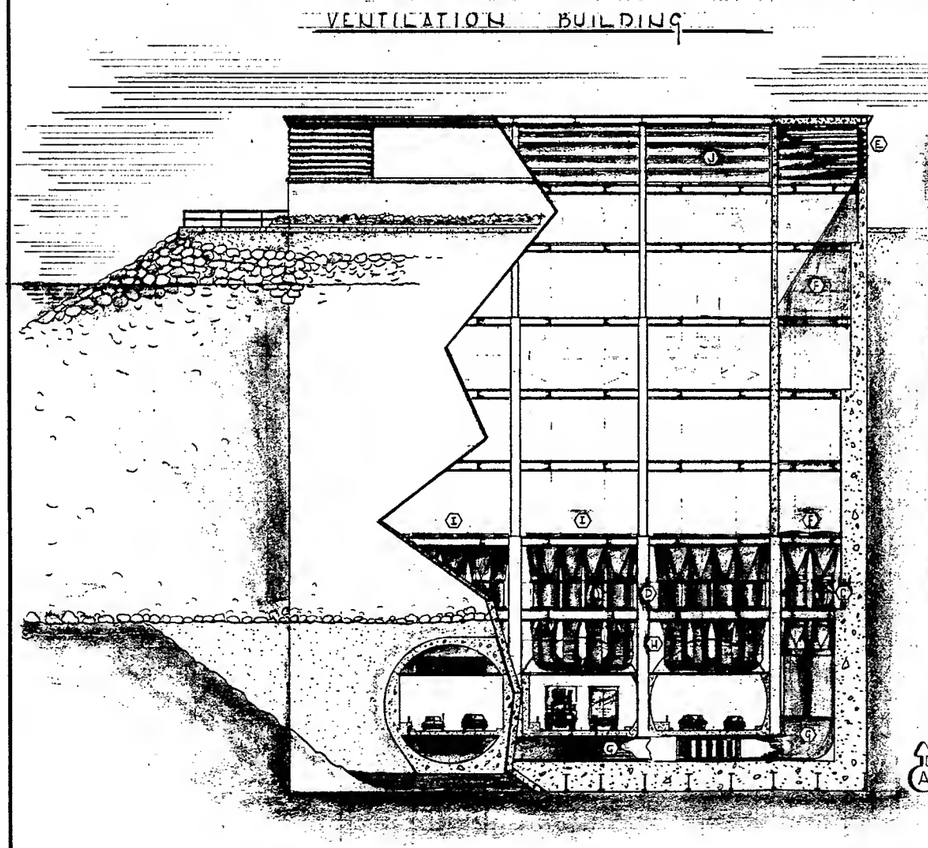

SECTION A-A

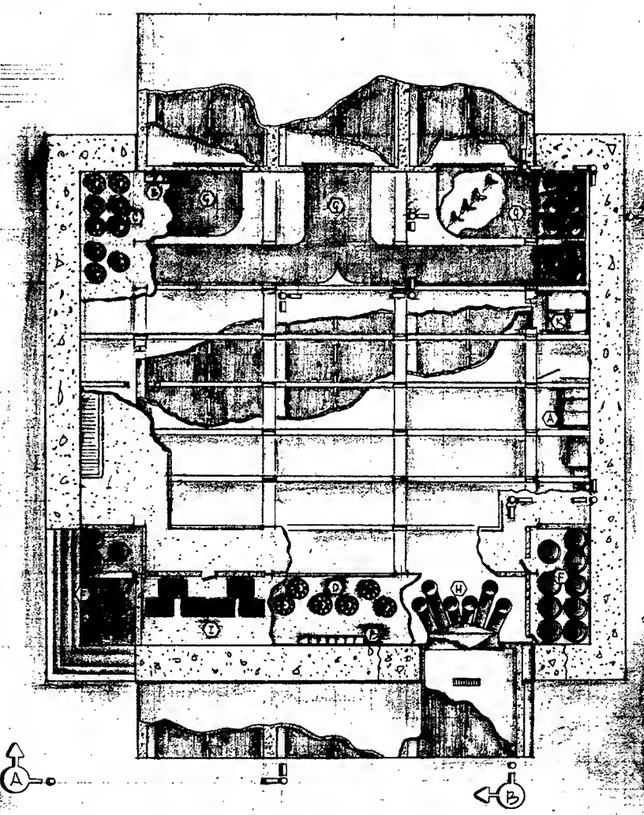

PLAN

SEC

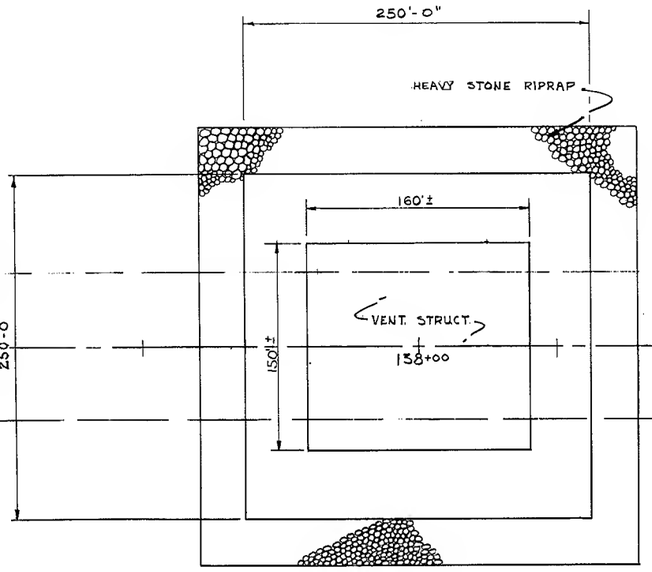

PLAN

0 50 100 150 FT.
GRAPHIC SCALE

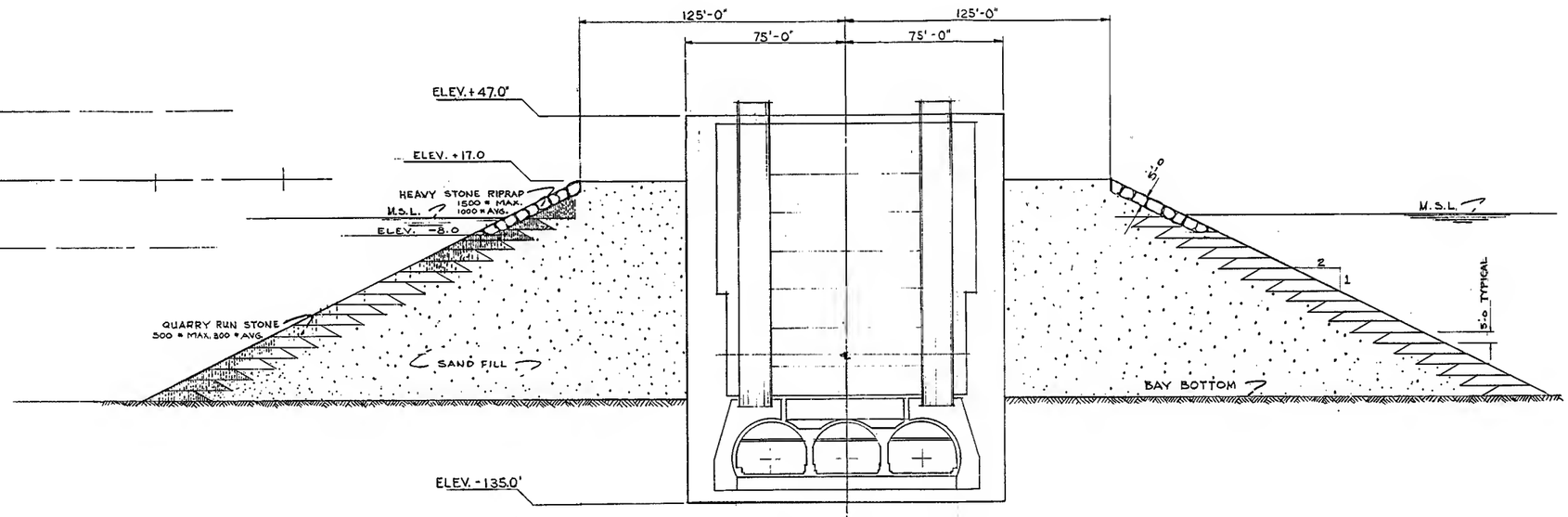

STA. 138+00

0 10 20 30 60 90FT.
GRAPHIC SCALE

SAN FRANCISCO – MARIN CROSSING
TYPICAL VENT STRUCTURE
AND PROTECTIVE BARRIER

Fig. 8

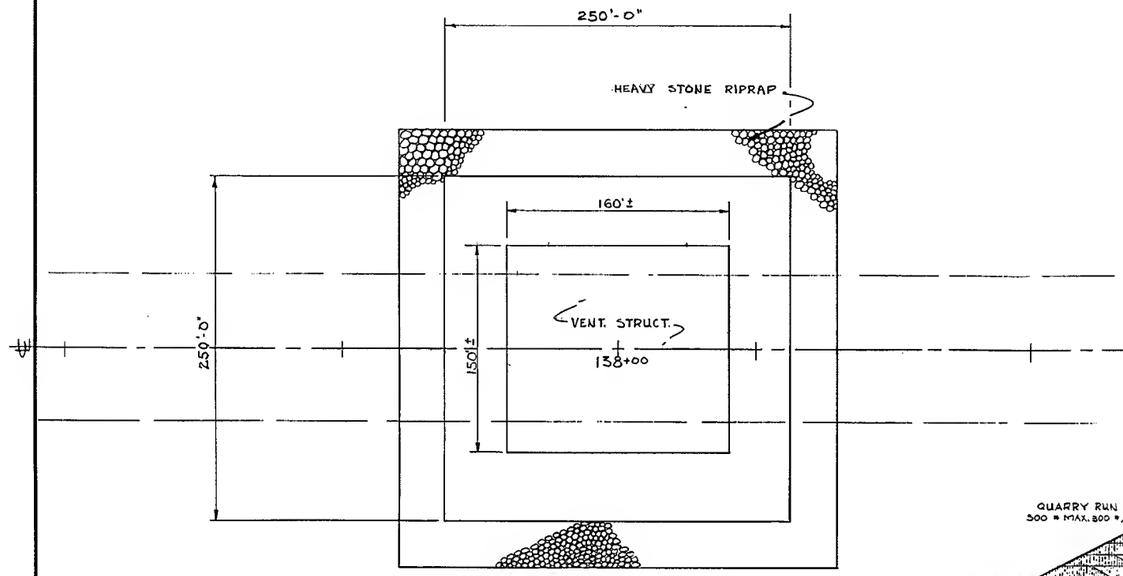

PLAN

0 50 100 150 FT.
GRAPHIC SCALE

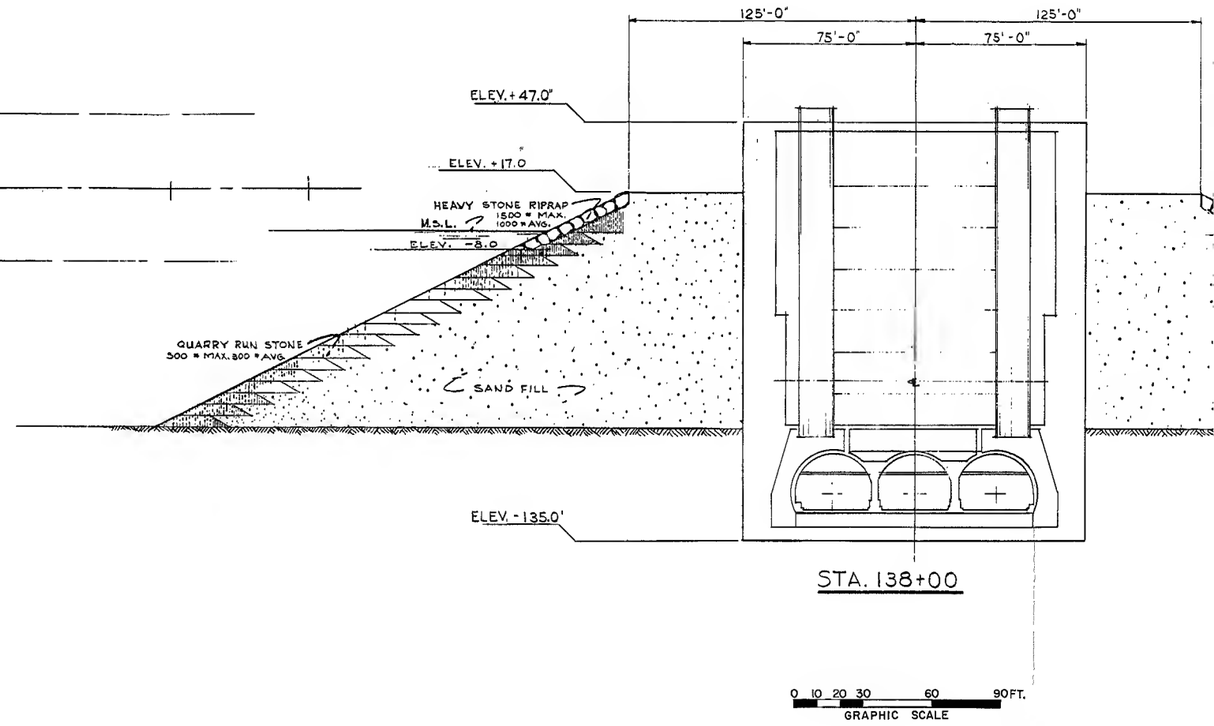

STA. 138+00

0 10 20 30 60 90FT.
GRAPHIC SCALE